DYNAPAC
Part of the Atlas Copco Group

Workshop Manual

Screed

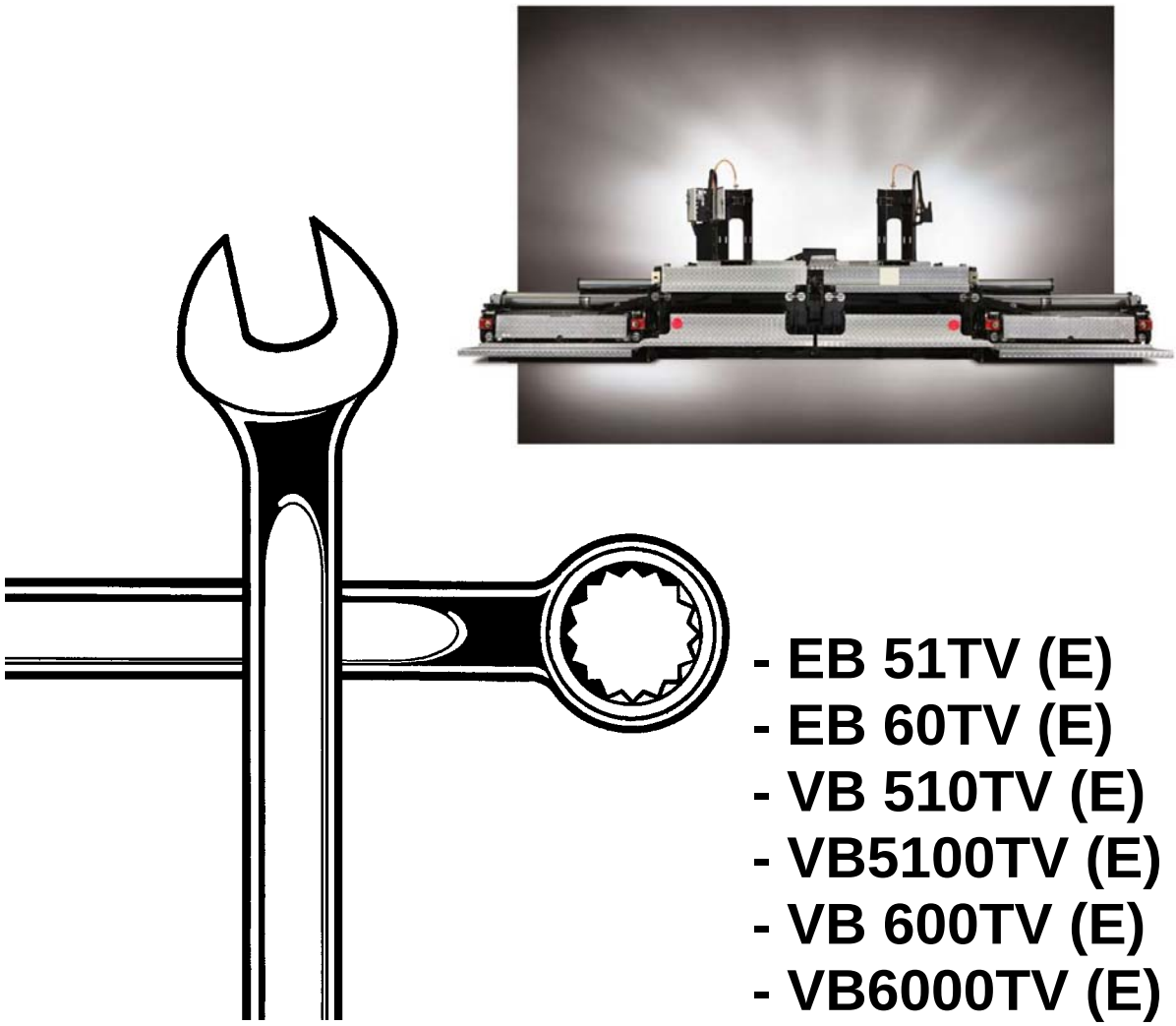

- EB 51TV (E)
- EB 60TV (E)
- VB 510TV (E)
- VB5100TV (E)
- VB 600TV (E)
- VB6000TV (E)

Table of contents

Notes regarding safety for maintenance

During all maintenance work, the regulations regarding health, work and fire protection are to be heeded. The necessary protective equipment is to be worn continuously.

If not described otherwise, maintenance work must only be carried out with the engine stopped.

Maintenance work must only be carried out on even and stable surfaces.

When working in closed areas, exhaust fumes must be vented to the outside. Provide sufficient ventilation.

Before beginning maintenance work, secure the machine against inadvertent starting, rolling away or lowering by:

putting the drive lever into the neutral central position and putting the machine feed into the “zero” position using the selection switch.
Removing the ignition key and the main switch.
Positioning the sign “DO NOT START” on the driver’s platform so that it is clearly visible.
If required, use chocks to prevent the undercarriage from rolling away.

If safety and protective devices must be removed for maintenance, they must be properly reinstalled again before putting the machine back into operation.

Do not use easily flammable materials during cleaning. Always keep steps and other areas where persons can stand free of lubricants and slip-proof.

When using the installed high-pressure clearer or a steam sprayer to hose down electric parts, do not expose any electronic modules, insulators or ventilators to the direct water jet; cover these items if possible.

Avoid electrical soldering work on the machine; this can lead to damage of the electronic and hydraulic modules!
However, if exceptional electrical soldering work on the machine should become necessary, the following is to be heeded before beginning work:
the ignition is turned off

Notes regarding safety for maintenance

the power circuit is interrupted
During all work on the electrical installation, always remove the mass cable from the battery.

Only use fuse inserts of the stipulated amperage.

Liability exclusion in case of use of non-original spare or wear parts as well as incorrect operating materials.

For maintenance and repair work, only the wear and spare parts allowed by the manufacturer are permitted to be used and are to be installed by experts. Consult the manufacturer in case of doubt.

Only those materials that are described in these operating instructions are to be used as lubricating and operating materials.

In the case of non-compliance with these regulations, liability of the manufacturer for resulting damage is excluded.

Electrical Heating

Safety instructions

Any failure to follow the safety instructions and safety regulations when operating the electrical screed heating, leads to a risk of electric shock.

Danger of life
Without exception, all maintenance and repair work on the medium voltage electric system must be carried out by an electrician.

Ensure that all protective devices and covers are available and appropriately secured !

Immediately repair any noticed damage! Operation must be discontinued in the event of faults!

Technical data

	EB51 / VB510 / VB5100	EB60 / VB600 / VB6000
Basic width	2550 mm	3000 mm
Max. width, hydra. extended	5100 mm	6000 mm
Screed extension parts	350 / 750 mm	350 / 750 mm
Max. width* with extension parts	8800 mm	9700 mm
Max. tamper frequency Max. vibration frequency	25 Hz 58,3 Hz	25 Hz 58,3 Hz
Max. tamper frequency Max. vibration frequency	1600 $^{1}/_{min}$ 3500 $^{1}/_{min}$	1600 $^{1}/_{min}$ 3500 $^{1}/_{min}$
Weight, incl. end gate plates	3400 kg	3850 kg
Weight, extension part 750 mm Weight, extension part 350 mm	ca. 240 kg / ca. 125 kg /	ca. 240 kg / ca. 125 kg /
Crown profile adjustment	+ 4% / -2%	+ 4% / -2%
Tamper stroke	4,8 mm	4,8 mm
Screed heating system	Propane gas- flame heating system with electrical temperature and flame control or electrical heating system with an automatic controlled 400 Volt generator for power supply	
Operating voltage	24 Volt	
Tamper drive	Hydraulic, steeples regulation	
Vibration drive	Hydraulic, steeples regulation	

*Max. width depend of Paver type

Starting torque for shoulder stud

Metric thread

Measurement		Starting torque in Nm	
	8.8	10.9	12.9
M 4	2,8	4,1	4,8
M 5	5,5	8,1	9,5
M 6	9,6	14	16
M 8	23	34	40
M 10	46	67	79
M 12	79	115	135
M 14	125	185	220
M 16	195	290	340
M 18	280	400	470
M 20	395	560	660
M 22	540	760	890
M 24	680	970	1150
M 27	1000	1450	1700
M 30	1350	1950	2300

Metric fine thread

Measurement		Starting torque in Nm	
	8.8	10.9	12.9
M 8 x 1	25	37	43
M 10 x 1,25	49	71	83
M 12 x 1,25	87	130	150
M 12 x 1,5	83	120	145
M 14 x 1,5	135	200	235
M 16 x 1,5	210	310	360
M 18 x 1,5	315	450	530
M 20 x 1,5	440	630	730
M 22 x 1,5	590	840	980
M 24 x 2	740	1050	1250
M 27 x 2	1100	1550	1800
M 30 x 2	1500	2150	2500

Special - starting torque of screws

Tamper

Tamper frame – Tamper blade	110 Nm
Tamper frame – Tamper truss	210 Nm (+Loctite middle strong)
Tamper frame – Tamper wing	210 Nm
Tamper shaft – Shaft coupling	150 Nm
High adjustment, Draw in bolt	300 Nm

Vibration

Vibration truss	95 Nm (+Loctite 243)

Bottom plate

Bolt, M12	72 Nm

Adustment Table

Description		EB 51 TV / VB 510 TV	EB 60 TV/ VB 600 TV
Angel of attack Adjustment of an iron platte	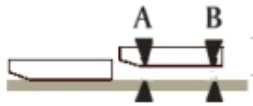	A / B = 3 mm	A / B = 3 mm
Adjustment on the Paver		A / B = 3 mm	A / B = 3 mm
Tamper adjustment Lowest position	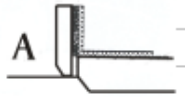	A = 0 mm	A = 0 mm
Clearance to the frame	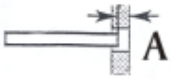	A = 0,5 mm	A = 0,5 mm
Clearance, Main screed center position		A = 1,5 - 2,0 mm	A = 1,5 - 2,0 mm
Tamper protection plate Clearence to tamper blade		A = 0,1 - 0,3 mm	A = 0,1 - 0,3 mm
Screed bottom plate Clearence to tamper blade		A = > 0,8 mm	A = > 0,8 mm
Spark plug Clearance, Electrode - ground	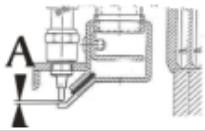	A = 3,0 - 4,0 mm	A = 3,0 - 4,0 mm

Bottom plate Gas - heating

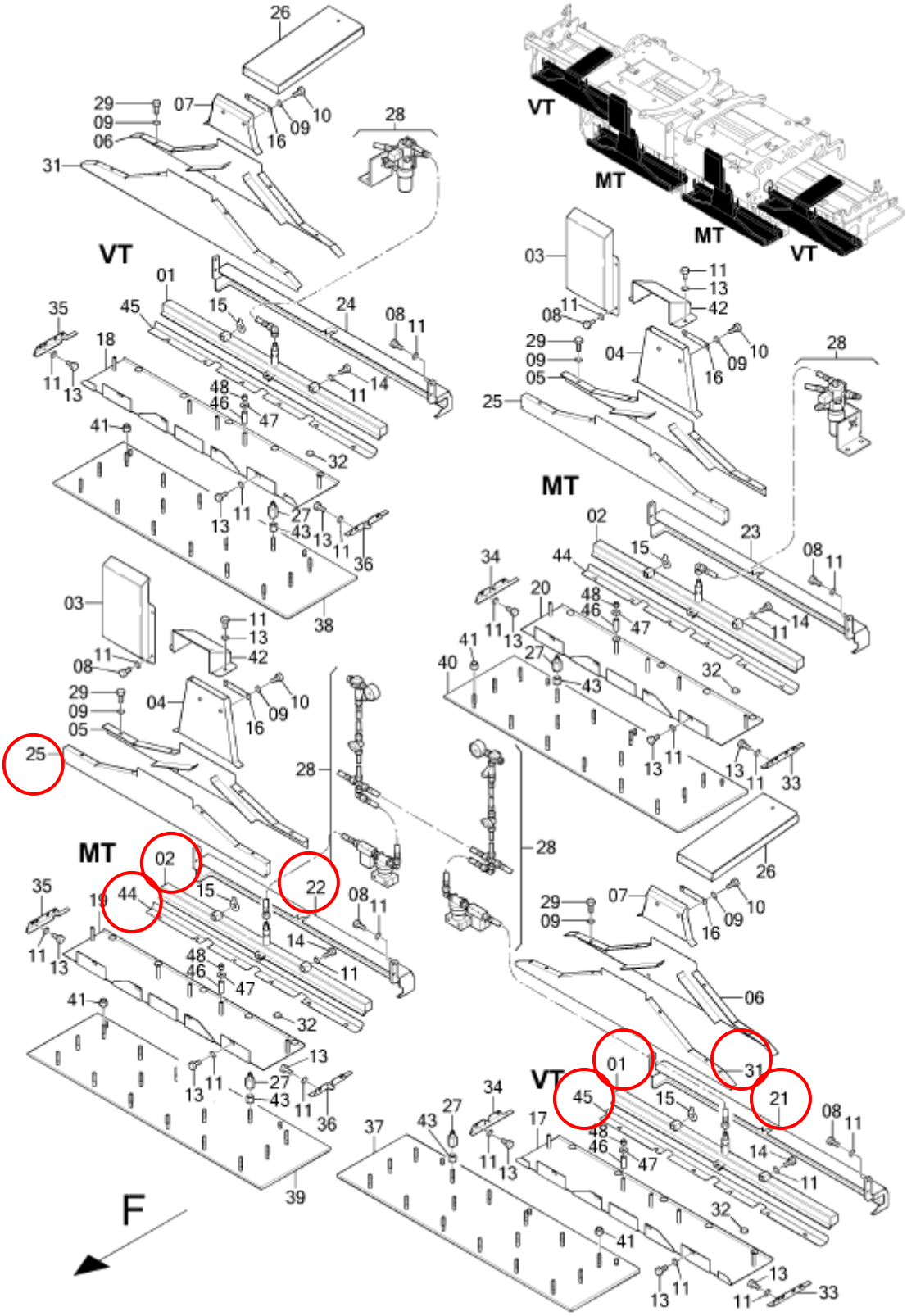

Bottom plate Gas - heating

Exchange and adjustment

- Remove protective stripes (21 – 24).
- Disconnect gas hose and dismantle injector burner (01,02)
- Dismantle shield plate (44,45)
- Remove tamper deflector plates
- Swing up the tamper frame or dismantle if necessary
- Dismantle exhaust duct extension (25,31)

- Dismantle nuts of bottom plate and remove these.
- Attach the new bottom plate. Use new self looking nuts only !
  Starting torque of nuts ⇒ **72 Nm**.

Adjustment measurement⇒ see Table page 9
Keep cleanness by assembly !

- Assemble exhaust duct extension (25,31).
- Put back respectively assemble the tamper frame. (see page 17).
- Assemble and adjust the tamper deflector plates. (see page 19).
- Assemble the shield plate
- Assemble injector burner (01,02) and gas hose
- Assemble protective stripes (21 – 24).

After replacement of bottom plates check the basic adjustment of angle of attack > hydraulic extension to main screed. (see page 33 – 35)

The hexagon screw in drive direction R/H-side is to fix with an safty plate and a torque of **35 Nm**.
The hexagon screw in drive direction L/H-side is to fix with an torque of **70 Nm.**

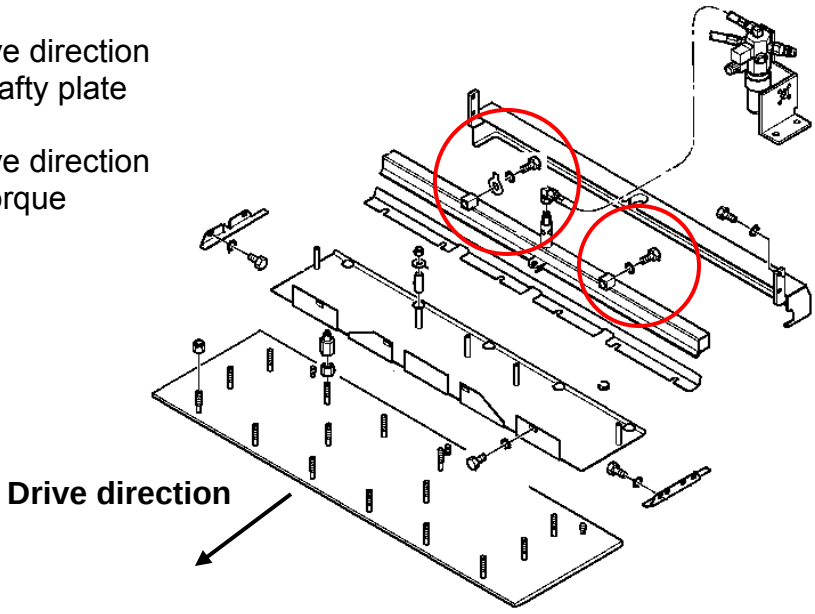

Bottom plate electrical heating

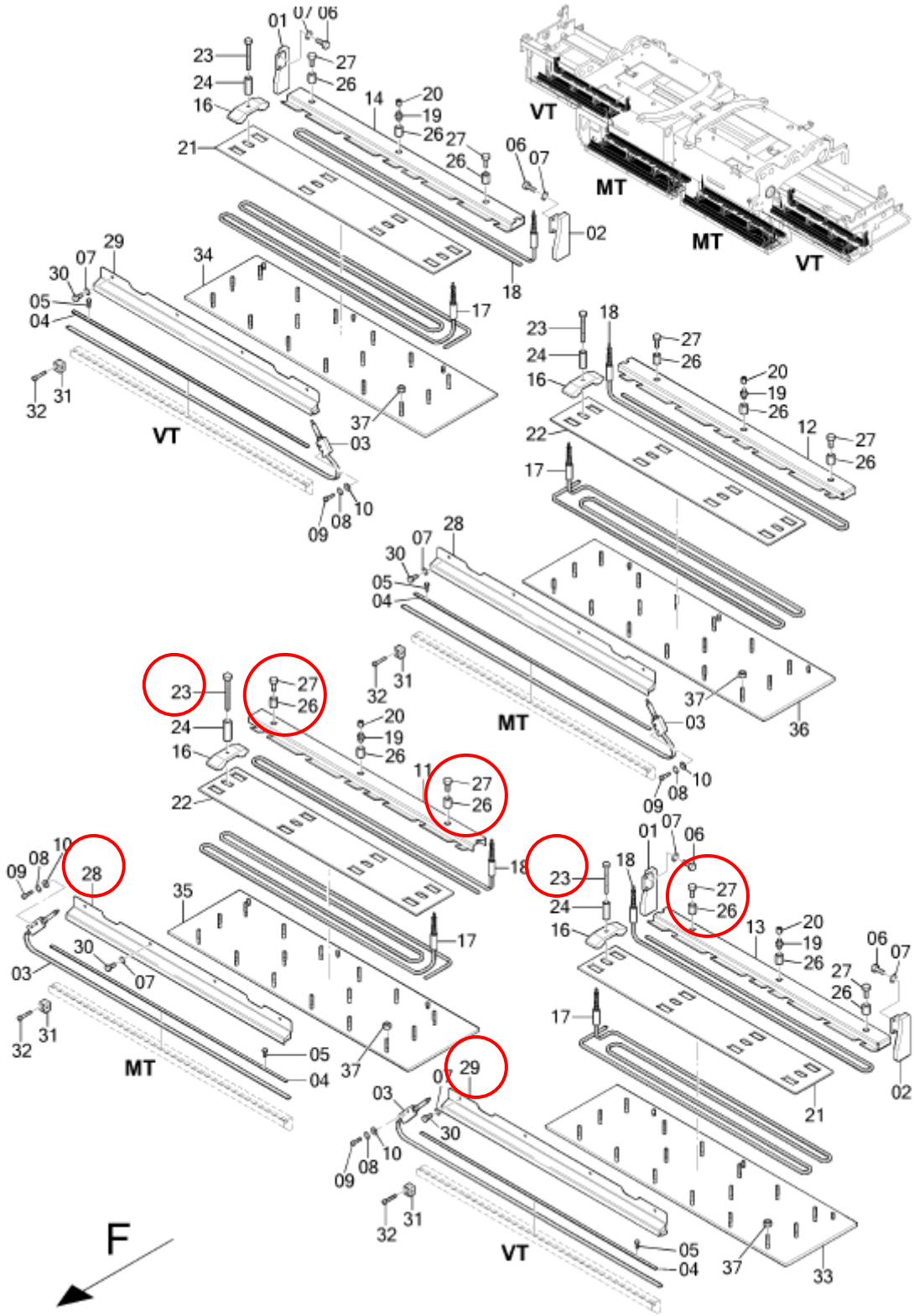

Bottom plate electrical heating

Exchange and adjustment

- Remove protective stripes (28,29).
- Remove tamper deflector plates.
- Swing up the tamper frame or dismantle if necessary
- Disconnect the electric connection from the panel radiator (rod heater)
- Dismantle the temperature sensor
- Dismantle lock screw (23,27)
- Pay attention of the panel radiator, dismantle if necessary
- Dismantle nuts of bottom plate and remove these
- Attach the new bottom plate. Use new self looking nuts only!
  Starting torque of nuts ⇒ **72 Nm**.

Adjustment measurement⇒ see table page 9
Keep cleanness by assembly !

- But back, respectively assemble the tamper frame. (see page 17).
- Assemble and adjust the tamper deflector plate (see page 19).
- Assemble protective stripes (28,29)

The rod heater are equited with one fixed point. This fix point is the first screw,
(Main screed from the outside, extension part from the inside):
Starting torque of > **70 Nm**.
And for temperature compensation
all other screws starting torque of **35 Nm.**

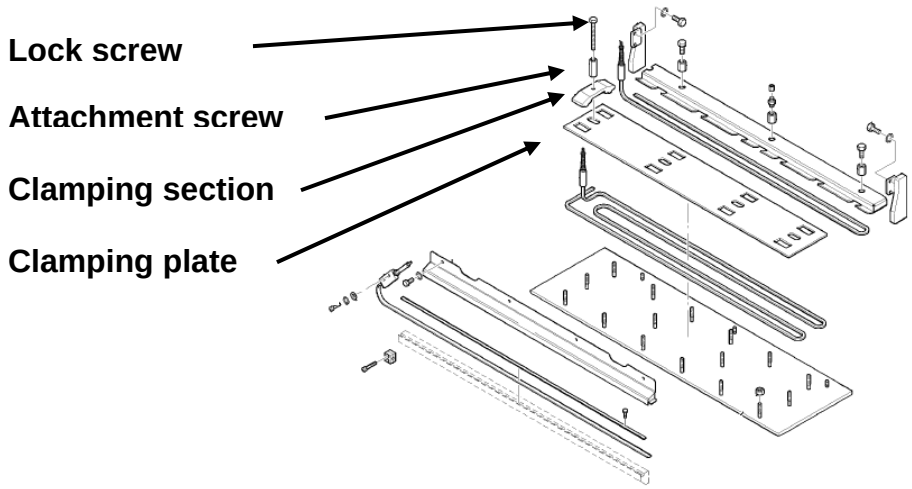

After replacement of bottom plates check the basic adjustment of angle of attackn > Hydraulic extension to main screed. (see page 37 - 39)

Tamper

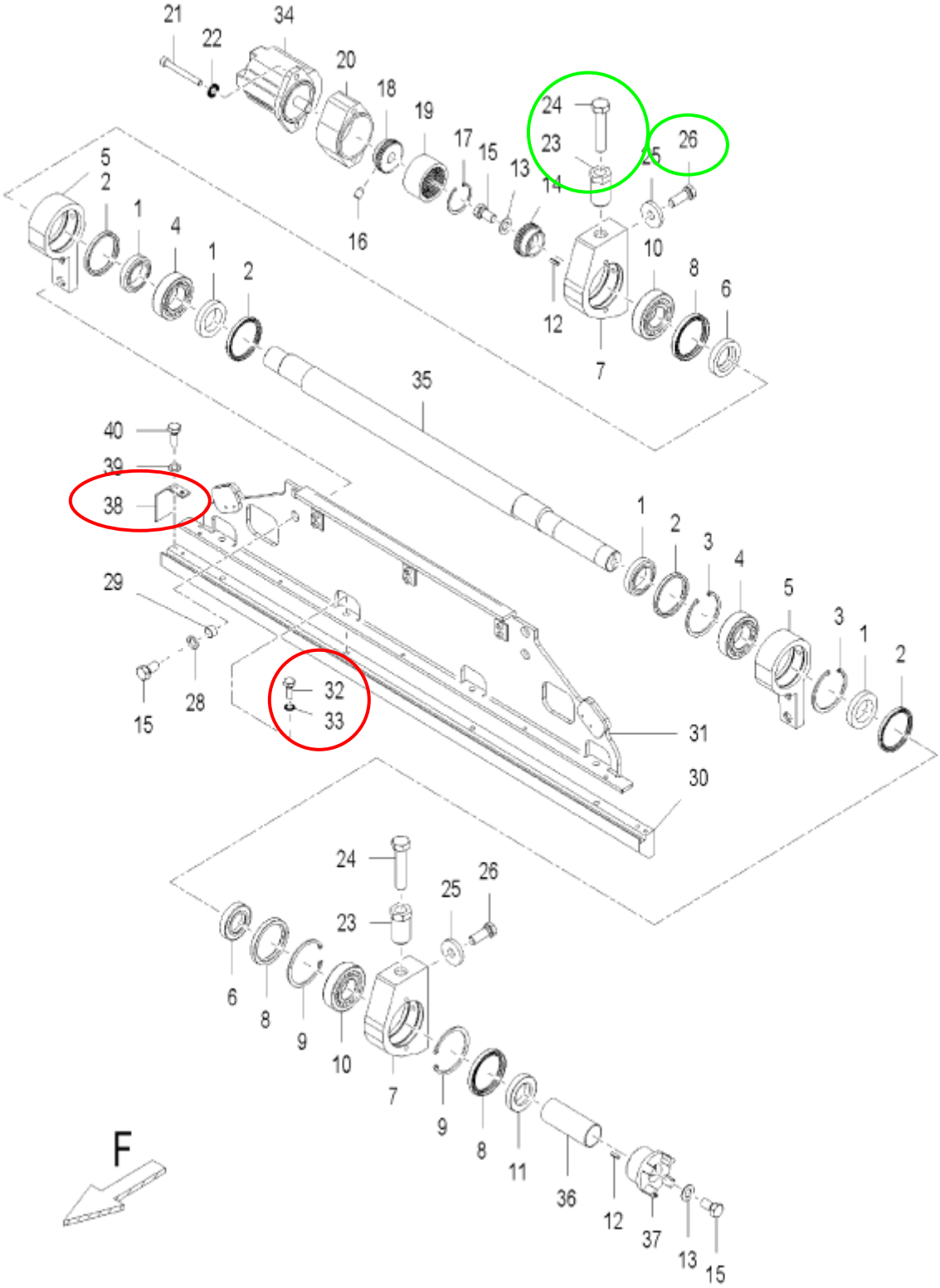
21
22
34
20
18
19
17
15
13
14
24
23
25
26
5
2
1
4
1
2
16
10
8
6
12
7
35
40
39
38
29
28
15
32
33
1
2
3
4
5
3
1
2
31
30
24
25
26
23
6
8
9
10
7
9
8
11
36
12
37
13
15
F

Tamper

Exchange and adjustment of tamper blade

- Dismantle tamper defector plates.
- Remove end plates(38) on hydraulic extensions.
- Loose screws (32).
- Check the wearing rod of abrasion if necessary change.
- Attach new tamper blades. Use new screw looking rings (33).
  Staring torque ⇒ **110 Nm**
  The tamper blade shut be have full contact with the wearing rod. If necessary adjust these.
- Before assemble of tamper deflector plate, spread on the tamper blade with lubricant (for example: Molycote).
- Assemble end plates (38).
- Assemble tamper protection plate.

Adjustment measurement⇒ see Table page 9
Keep cleanness by assembly !

Tamper height adjustment

Lower adjustment of tamper

- Loose a little bit the screws of bearing truss (26).
- Loose draw-in bolt (24).
- Adjust the correct height with pressing screw (23) clockwise.
- Tighten draw-in screw (24) (Starting torque ⇒ **300Nm**).
- Check adjustment again.

Tighten the screws of the bearing truss (26) with a starting torque of **210 Nm** and secure them with **Loctite "middle strong".**

Higher adjustment of tamper

- Loose a little bit the screws of bearing truss (26).
- Loose draw-in bolt (24).
- Adjust the correct height with pressing screw (23) counter clockwise.
- Tighten draw-in screw (24) (Starting torque ⇒ **300Nm**).
- Check adjustment again.

Tighten the screws of the bearing truss (26) with a starting torque of **210 Nm** and secure them with **Loctite "middle strong".**

Tamper

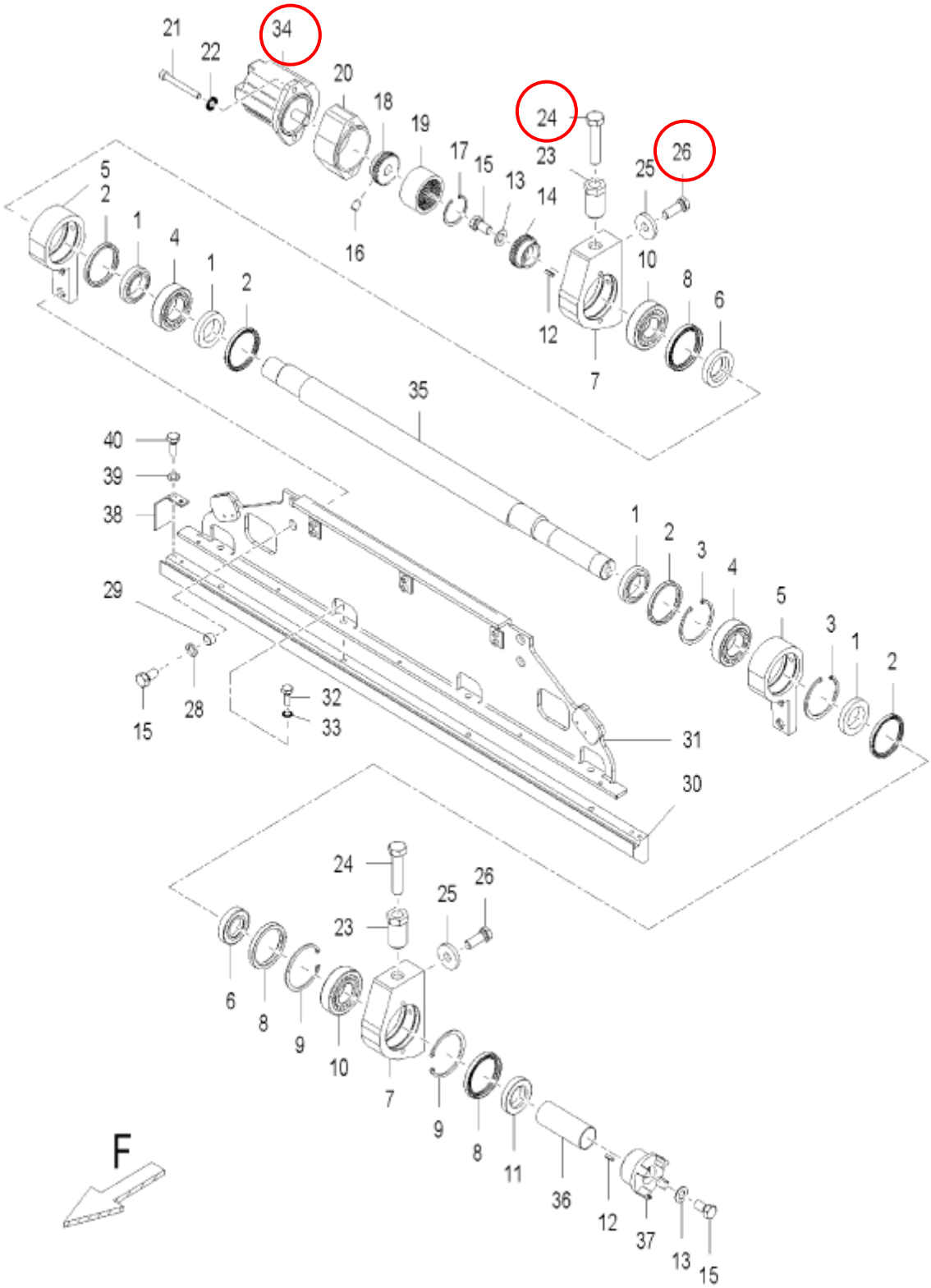
21
22
34
20
18
19
24
23
17
15
13
14
25
26
5
2
1
4
1
2
16
10
8
6
12
7
35
40
39
38
29
15
28
32
33
1
2
3
4
5
3
1
2
31
30
24
25
26
23
6
8
9
10
7
9
8
11
36
12
37
13
15
F

Tamper

Exchange of tamper unit

Dismantling

- Dismantle tamper deflector plate.
- Remove hoses of hydraulic motor (34).
- Loose draw-in screws (24.
- Remove screws of bearing truss (26).
- Remove draw-in screws (24) Look out ! Risk of accident!
- Remove tamper unit.

Montage

- Put on the tamper unit.
- Screw in place the draw-in screws (24.
- Screw in place the screws of bearing truss (26).
  (Staring torque ⇒ **210 Nm** + Loctite middle strong)
- Connect the hoes of hydraulic motor (34).
- Assemble the tamper deflector plate.
- Adjust the tamper deflector plate (see page 19).
- Adjust tamper height (see page 15).

Assemble the shaft coupling between tamper units of main screed that the both tamper blade are in line.

Tamper

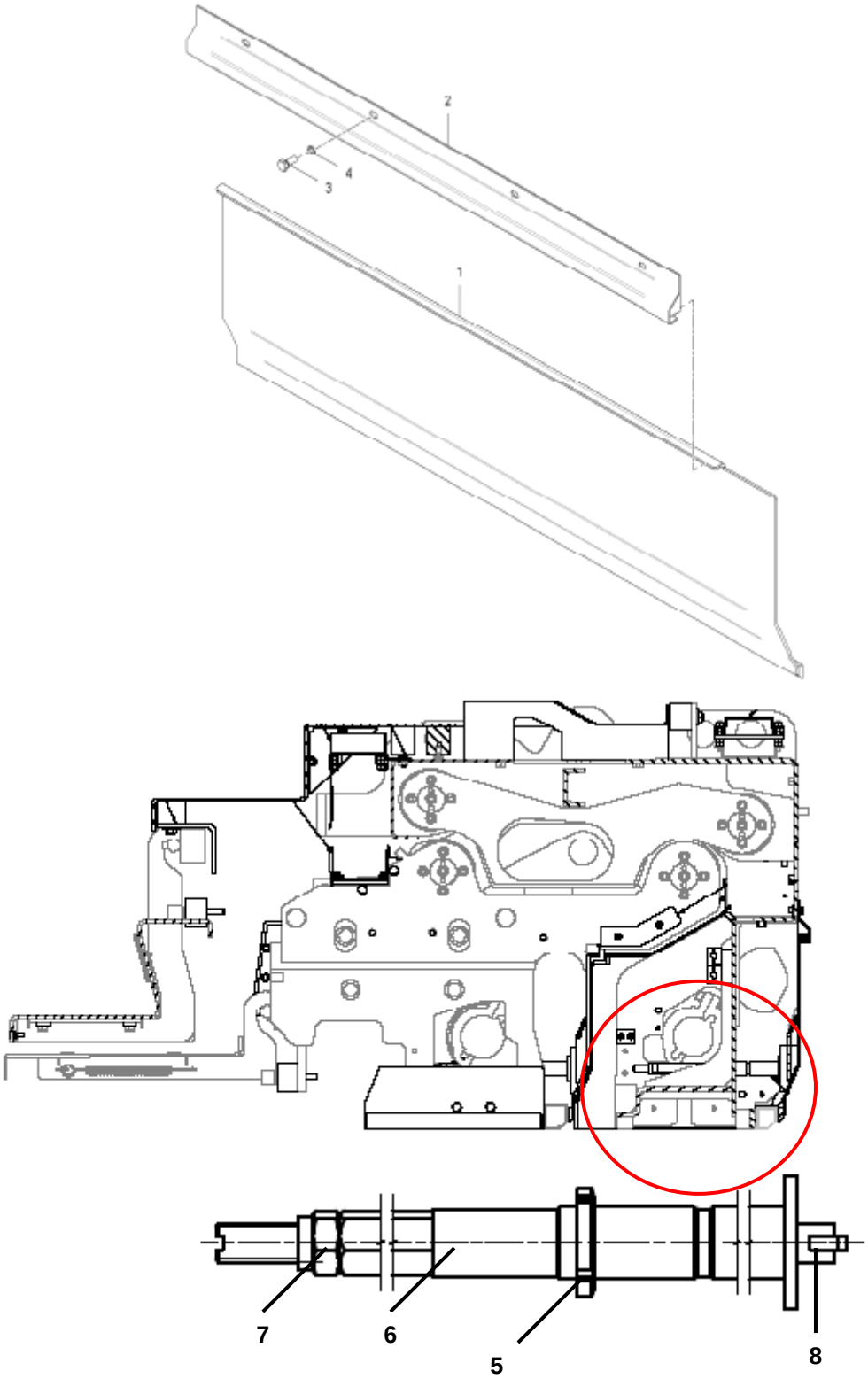

Tamper

Adjustment of tamper protection plate

- Dismantle the tamper protection (2) plate.

  Loosening the groove nut (5), protecing nut (7) and the adjustment screw (6) (grooved nut key part-No.: 614 13 61 00)

- Turn the hammersrew (8) to 90°.
- Lift the tamper plate and put it out to the side
- Clean tamper blade and wearing rod.
- Put in the tamper blade from the side and build it. Turn the hammerscrew (8) to 90°.
- Fix the tamper protection (2) plate.
- Adjust the clearance between tamper deflector plate and tamper blade with the adjustment screw (6). Afterwards tighten the protection nut (7) and groove nut (5).

Adjustment measurement ⇒ see Table page 9
Keep cleanness by assembly !

Clean the tamper blade by swinging of the tamper protection plate.

For that purpose loosenig the groove nut (5) and protection nut (7) and turn in theadjustment screw (6) about approx. 15 mm clockwise. After cleaning check the clearance of tamper deflector plate to tamper blade. If necessary adjust as aboved-mentioned described.

Tamper

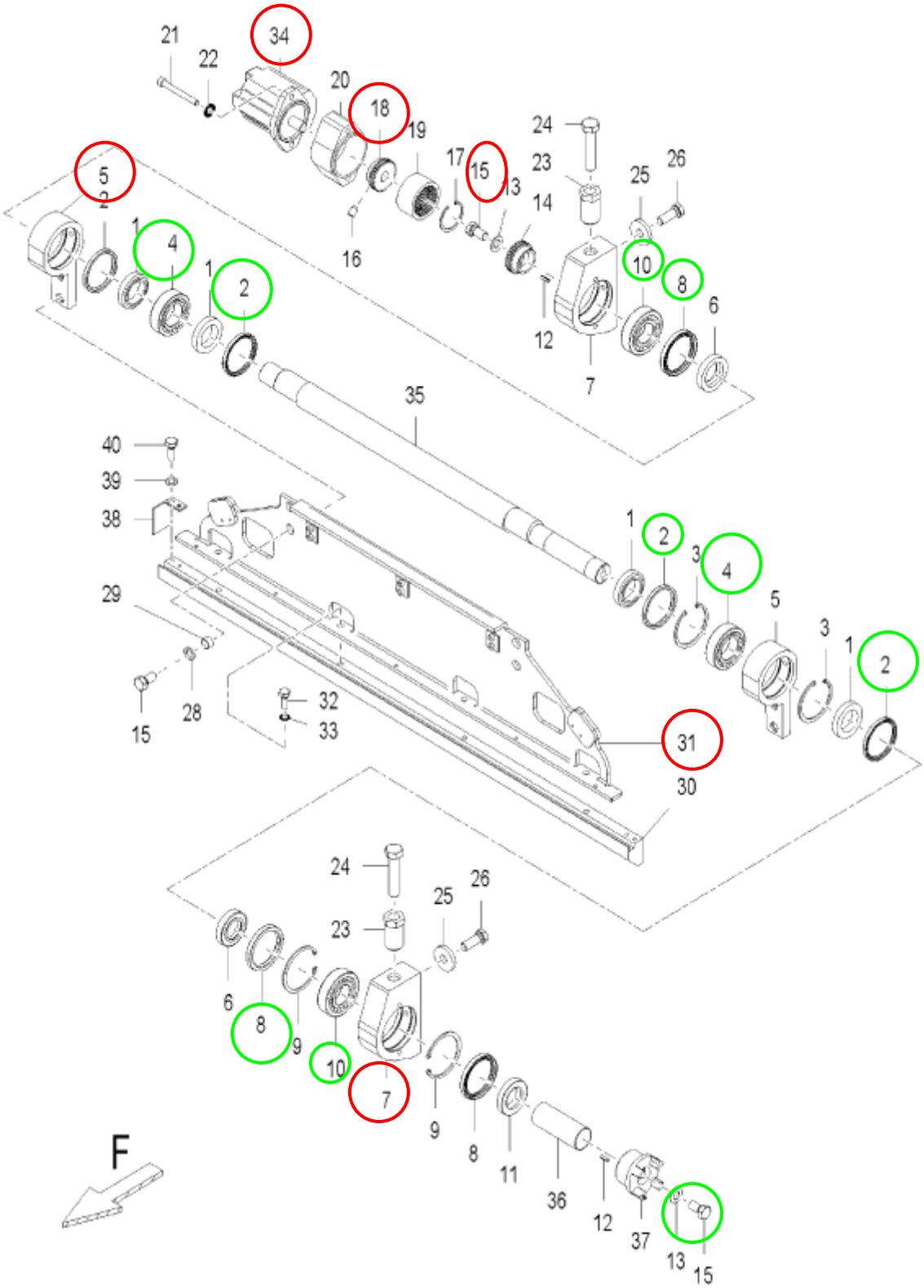
21
22
34
20
18
19
17
15
13
14
24
23
25
26
5
2
1
4
1
2
16
10
8
6
12
7
35
40
39
38
29
15
28
32
33
1
2
3
4
5
3
1
2
31
30
24
25
26
23
6
8
9
10
7
9
8
11
36
12
37
13
15
F

Tamper

Exchange of tamper bearings

- Dismantle of tamper unit (see page 17).
- Remove tamper frame (31) from tamper wing (5).
- Dismantle hydraulic motor (34) and coupling (18).
- Loose screw (15) from hydraulic motor side.
  Attention ! Screw are looked by screw-looking device “ loctite > middle strong”.
- Dismantle motor coupling.
- Mark the position and location of parts. Important for assembling !
- Remove complete the bearing truss (7) and wing (5) from the shaft.

- Loose screw (15) from coupling side.
  Attention ! Screw are looked by screw-looking device “loctite > middle strong”.
- Dismantle shaft coupling and distance bushing.

- Mark the position and location of parts. Important for assembling !
- Remove complete the bearing truss and wing from the shaft.
- Replace bearings (04,10) and shaft seals (02, 08).

! Pay attention of the right assembly of shaft seal (02,08) !
Packing washers to the bearing side.

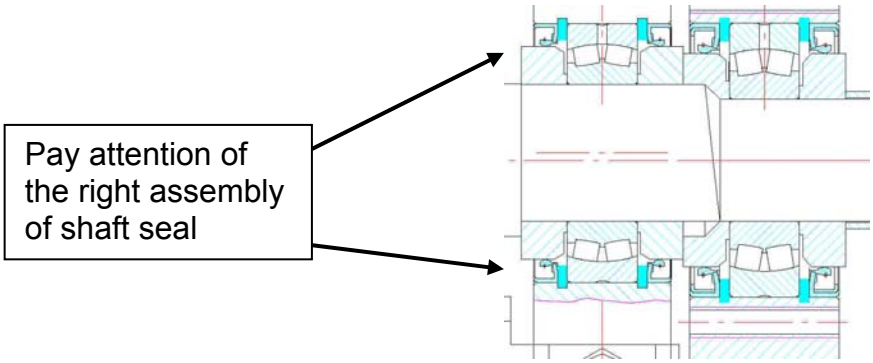

The bearings of wing of coupling side are fixed bearing, it means, there are protected by snap rings (03,09).
The bearings of wing of motor side are open bearing, it means, a horizontal compensation is possible.
! Do not install snap rings!

- Assembling of parts in opposite order.
  Look screw (15) with screw-looking device “loctide > middle strong”.
  Starting torque ⇒ **150 Nm**

Vibration

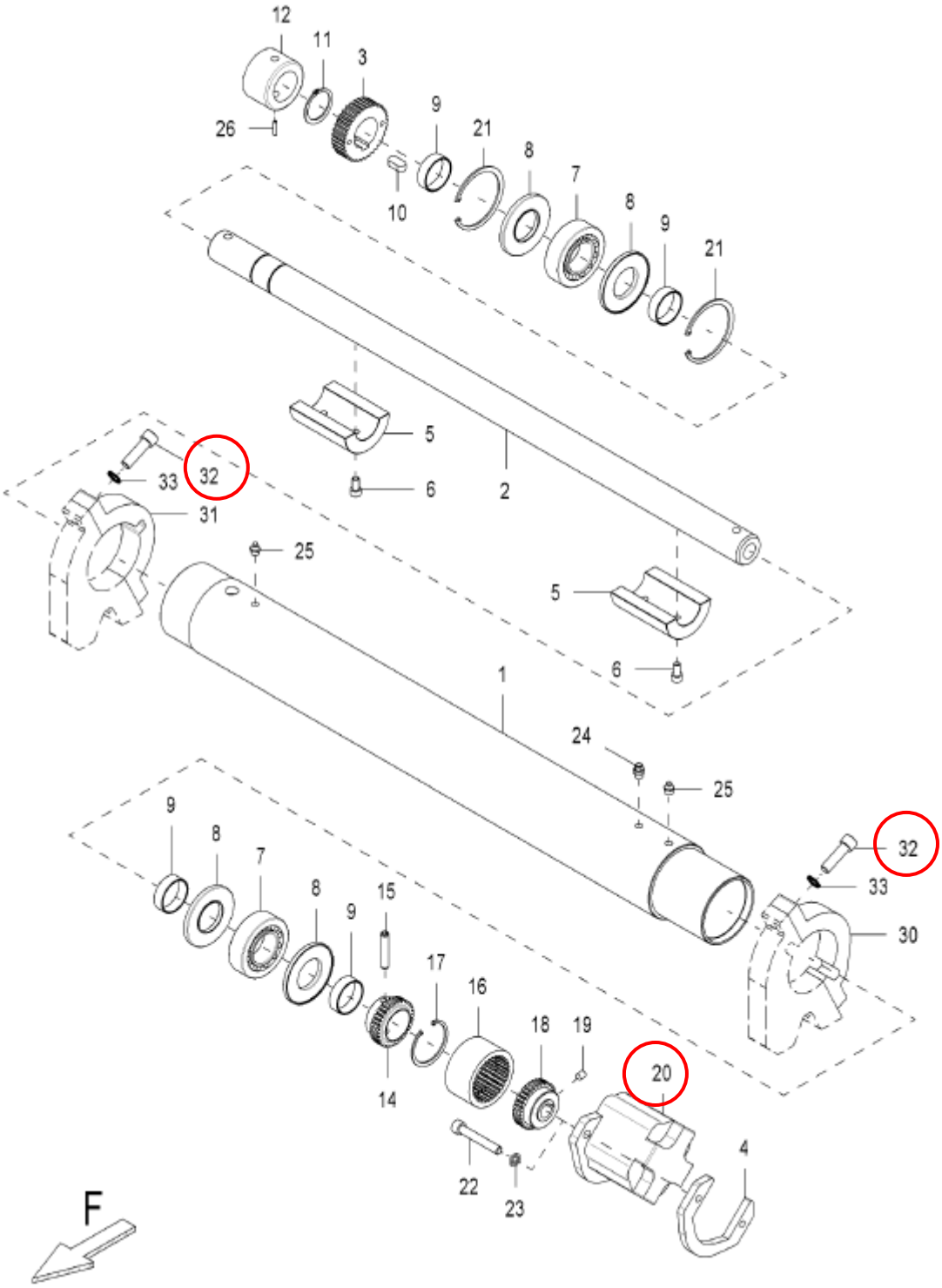
12
11
3
26
9
21
8
7
8
9
21
10
5
6
2
33
32
31
25
5
6
1
24
25
9
8
7
8
9
15
17
16
18
19
20
14
22
23
4
32
33
30
F

Vibration

Exchange of vibration unit

Dismantling

- Hydraulic extension parts only:
    - Dismantle the air-outlet conduit.
    - Dismantle the running board.

- Disconnect the plug of RPM control sensor (if it installed > option <).
- Remove the hoses of hydraulic motor (20).
- Remove the hoses of central lubrication device (if it installed > option <).
- **Mark the position of coupling on the main screed!**
- Dismantle the shackle (30,31) and srew (32).
- Remove vibration unit.

Montage

- Assemble the vibration unit, make sure that the greasing nipple (25) are in top position.
- Pay attention of the mark of coupling by assembling inside main screed.
- Attach shackle (30,31). Starting torque of screws ⇒ **95 Nm**.
- Bring back screw (32).
- Attach the hoses of central lubrication device (if it installed > option <).
- Attach the hoses of hydraulic motor (20).
- Hydraulic extension parts only:
    - Attach the air-outlet conduit.
    - Attach the running board.

Vibration center section

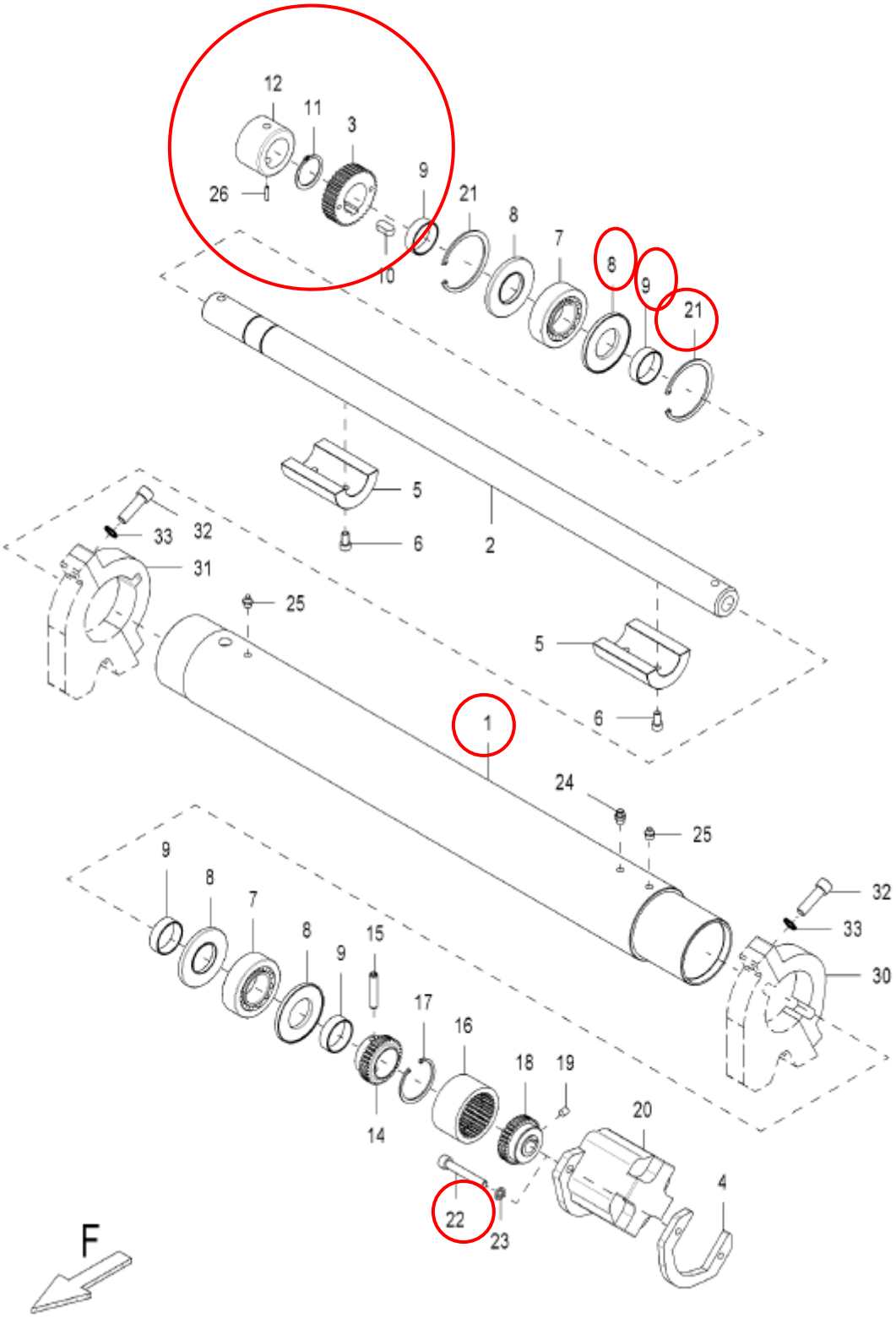

Vibration center section

Exchange bearings

- Remove the vibration unit (see page 23).
- Loose screws (22) and remove hydraulic motor (20).
- Remove flange (12), circlip (11), RPM adjustment (3) and feather key (10).
- Drive out the shaft to the motor side out of vibration tube (01).
- Mark the position and location of parts. Important for assembling !
- Remove, from the motor side out, snap ring (21), distance bushing (09) and shaft seal (08).
- Exchange roller bearing.

The bearings of bearing truss of coupling side are fixed bearing, it means, there are protected by snap ring (21).
The bearings of bearing truss of motor side are open bearing, it means, a horizontal compensation is possible.
! Do not install snap rings !

- Assembling of parts in opposite order.

  ! Pay attention of the right location of shaft seal ! (see picture).

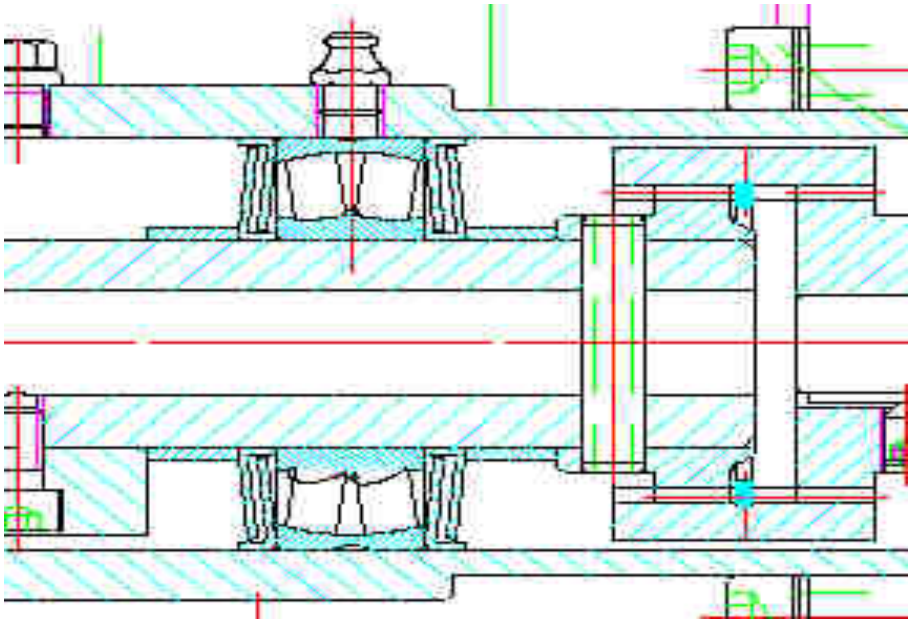

Vibration – extension

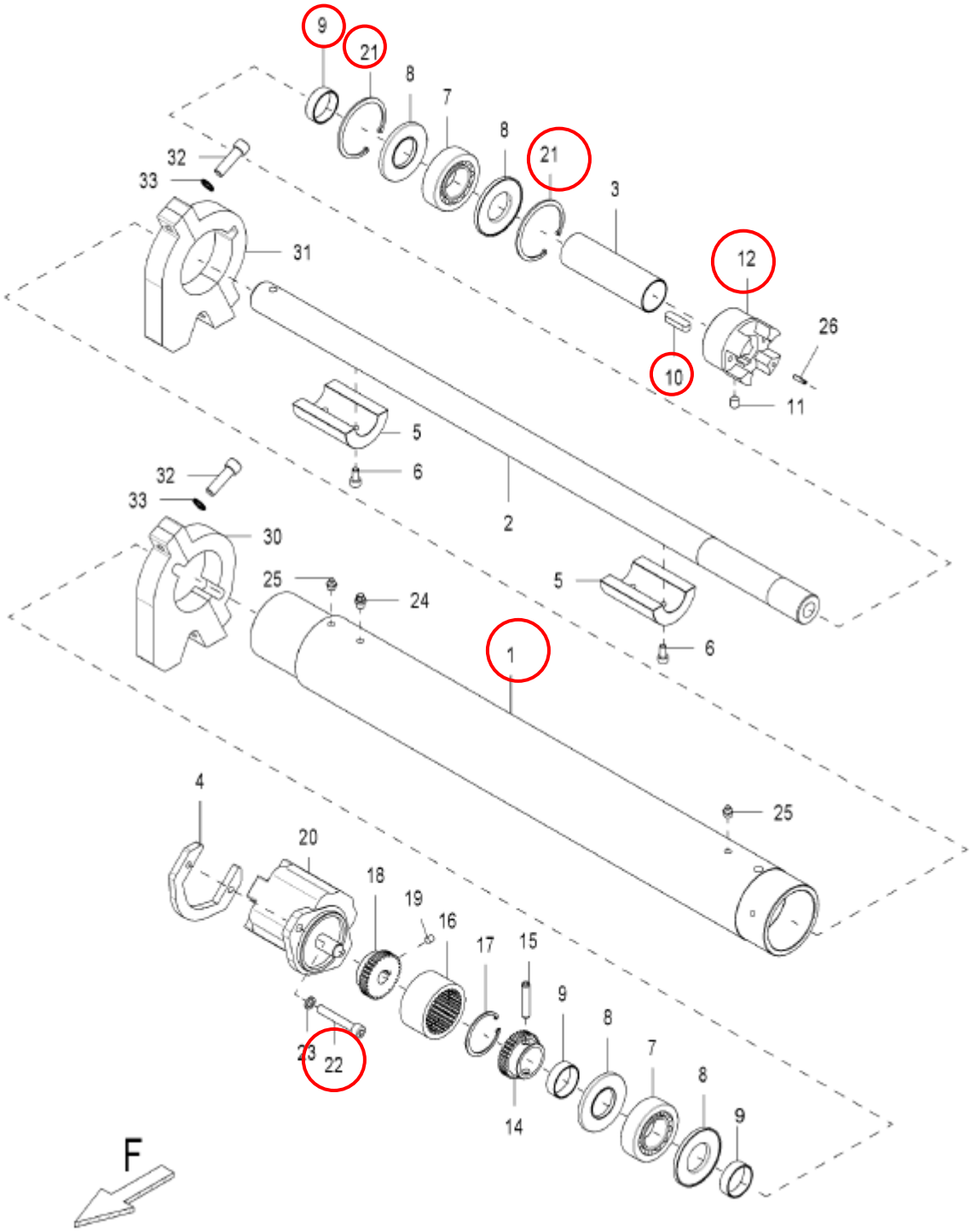

Vibration – extension

Exchange bearings

- Remove the vibration unit (see page 23).
- Loose screws (22) and remove hydraulic motor (20).
- Remove coupling (12) and feather key (10).
- Drive out the shaft to the motor side out of vibration tube (01).
- Mark the position and location of parts. Important for assembling !
- Remove, from the motor side out, snap ring (21), distance bushing (09) and shaft seal (08).
- Exchange roller bearing.

The bearings of bearing truss of coupling side are fixed bearing, it means, there are protected by snap ring (21).
The bearings of bearing truss of motor side are open bearing, it means, a horizontal compensation is possible.
! Do not install snap rings !

- Assembling of parts in opposite order.

! Pay attention of the right location of shaft seal ! (see picture).

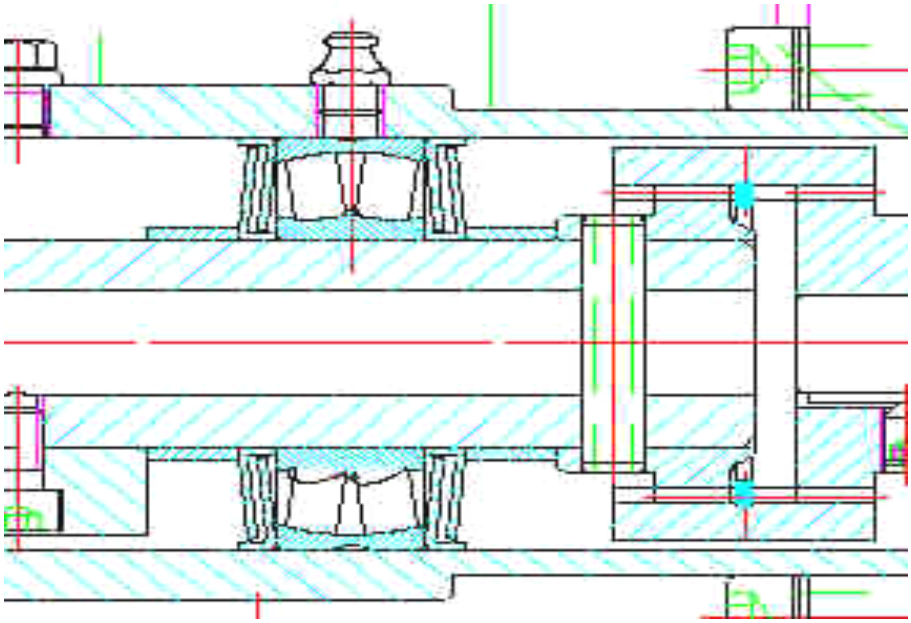

Hydraulic cylinder

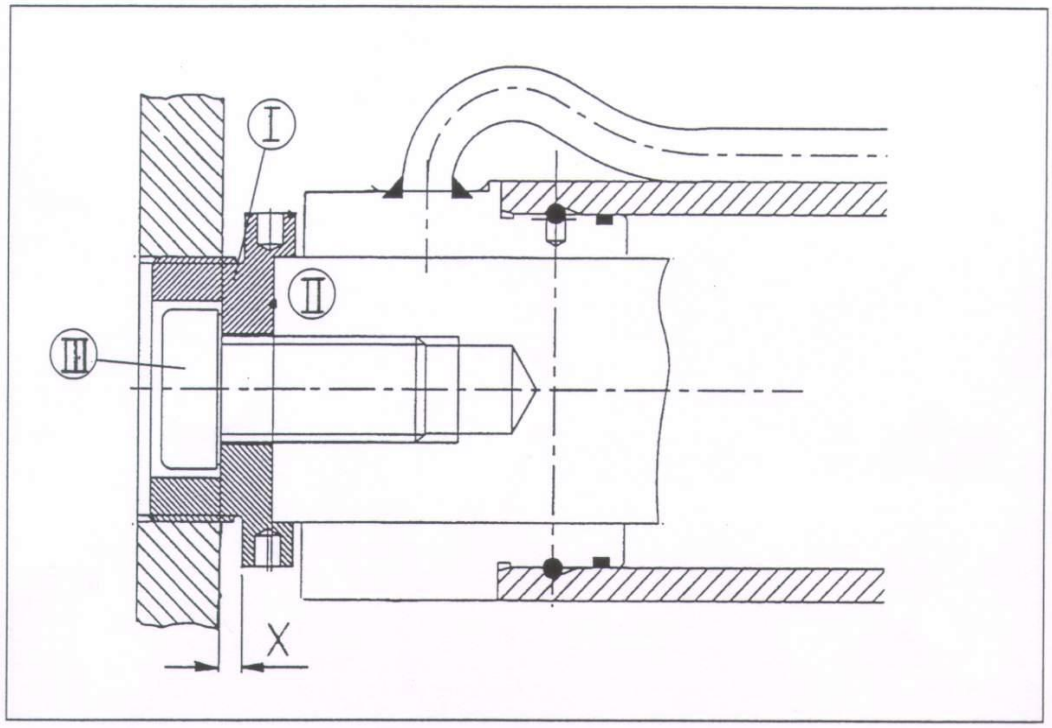

Hydraulic cylinder

Exchange and adjustment

- Extend the hydraulic extension parts complete.
- Loose screw (III).
- Run in the piston rod (II) about 50 cm.
- Disconnect the hydraulic connection.
- Remove inner looking ring.
- Exchange hydraulic cylinder. Pay attention of right position.
- Attach looking ring.
- Check, if a length compensation of stiff hydraulic pipe possible.
  Perhaps it is necessary to cut or plane off the connecting piece.
  Part No. 49220650 or to replace by a new one. Part No. 606.05.06.05.
- Connect the hydraulic pipes.
- Tighten screw (III) by hand.
- Run in both hydraulic extensions complete.
- Check, if are both hydraulic extension constant in the end position.
- In the end position of hydraulic extension parts has to be a clearance between the bottom plates from about 5 mm. To adjust on adjusting nut (I).
- Investigate measurement “X”.
- Remove screw (III) and adjusting nut (I).
- Run in the piston rod about 30 cm.
- Clean thorough the thread.
- Adjust the adjusting nut to measurement “X” and look adjusting nut (I) with screw-looking device “loctide > strong”.
- Tighten and look screw (III) by screw-looking device “loctide > strong”.

Guiding cylinder

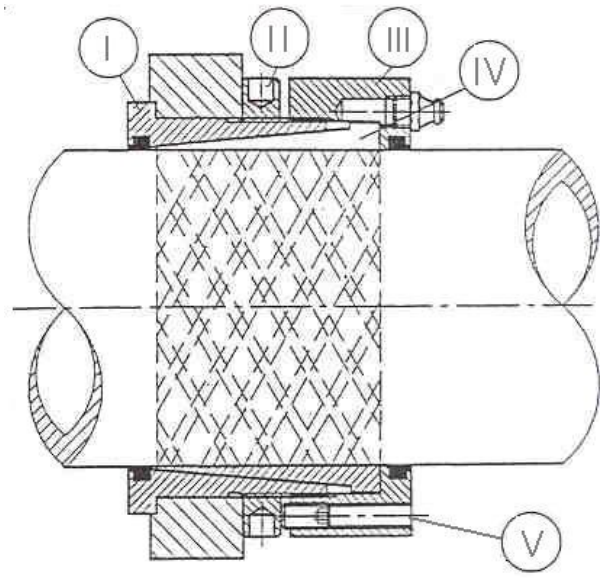

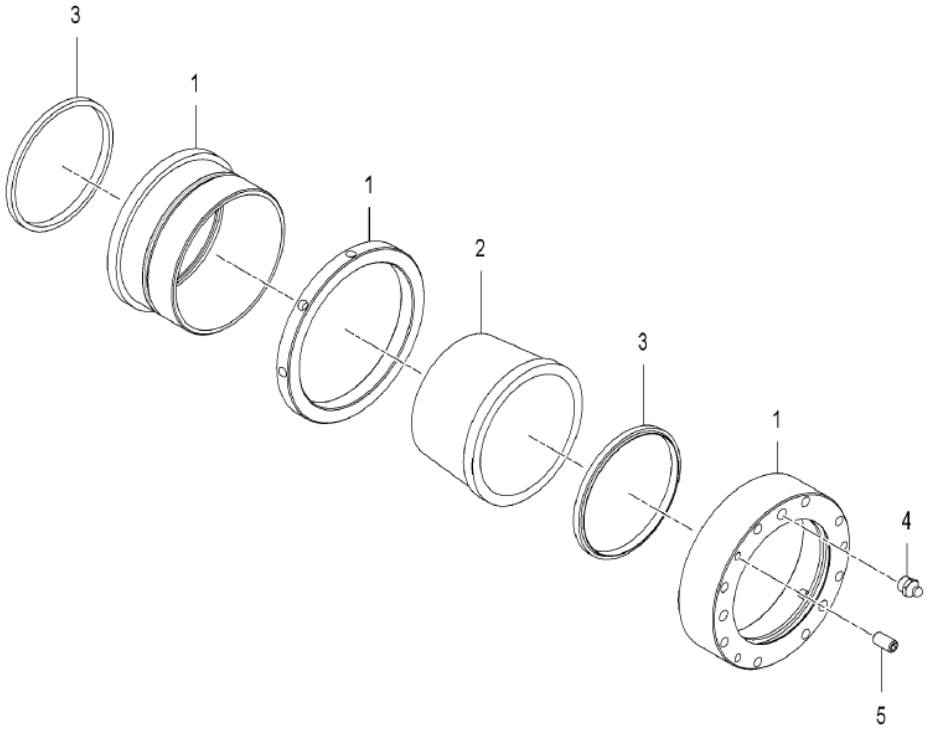

Guiding cylinder

Adjustment of bushings

In case that the clearance of guiding bushings are to much after long operation time and / or after one year or 1000 operating hours then is necessary to adjust the clearance. Here you have two possibilities for adjustment.

The clearance will be adjusted indirect over the starting torque on the bushing.
These method is a fast adjustment and without problems practicable.

Disadvantage: By negative influence for example: contamination, cock of bushings etc. is a wrong adjustment possible.

- Remove headless screw (V).
- Tighten the adjusting nut (III) with a starting torque about **70 Nm**.
  To use is a hooked wrench part No. 20.00.74.99 in connection with a torque wrench.
- Pay-free operation by these torque.
- Turn in and tighten the headless screw (V) in one of three thread holes.

1 → Tension unit assy.
2 → Bearing flange
3 → Scraper
4 → Grease nipple
5 → Threaded pin

Adjust and check all of 16 guiding bushings.

.

Guiding cylinder

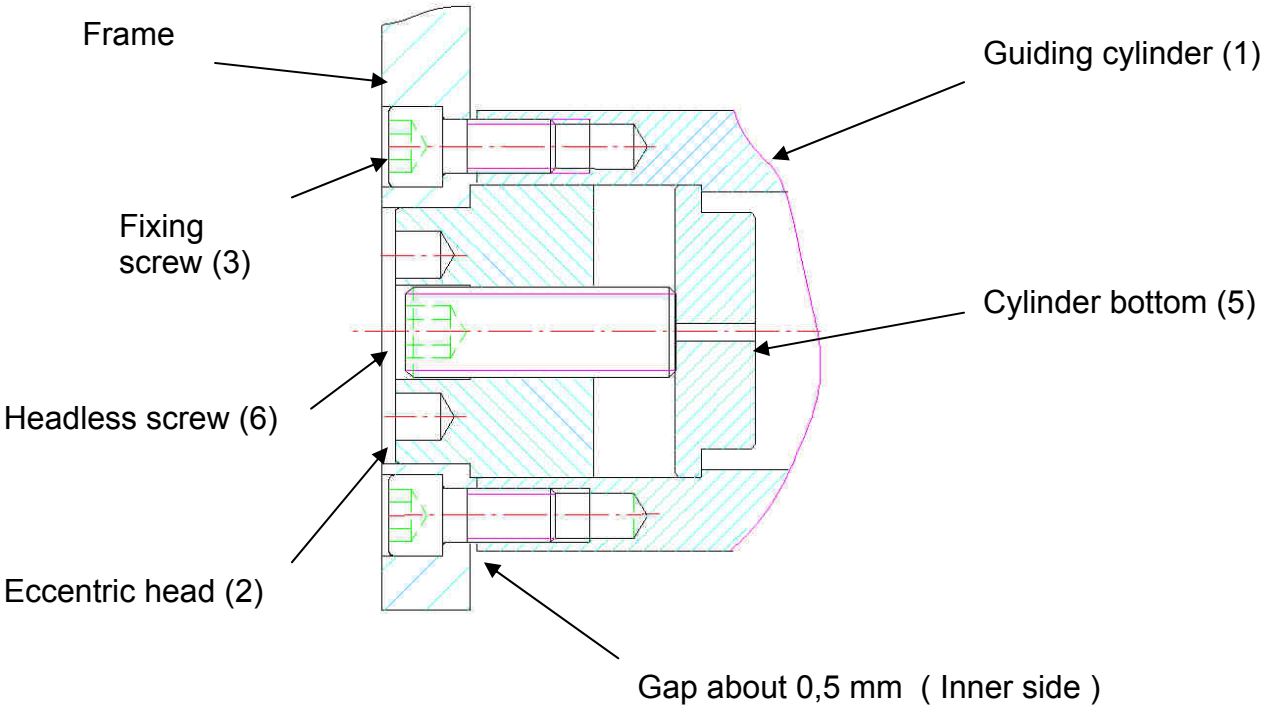

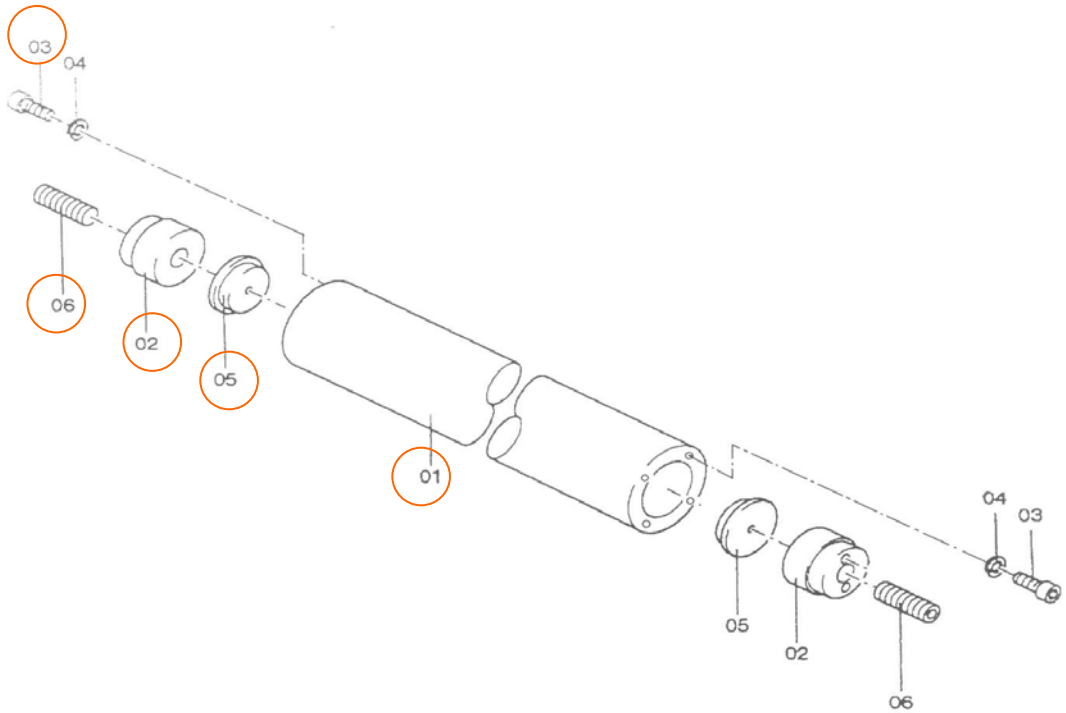

Guiding cylinder unit

Adjustment of guiding cylinder

To compensated the tolerances and to prevent a cock of hydraulic extension is necessary to adjust the guiding cylinder parallel.
The adjustment will be controlled over hydraulic pressure of extension parts.
It is necessary to grease the guiding cylinder before adjustment, to pay-free operation.
After complete extension of screed loose headless screw (6). Turn now the eccentric head (2) to the lowest position, it means, the mark (punch marks) has to be top position.
Move the hydraulic extensions several times. The hydraulic pressure shout be over the complete length constant. The run in hydraulic pressure is about 100 bar.
In case that the hydraulic pressure is considerable increasing you have to adjust the parallel movement of guiding cylinder by eccentric head (2) careful.
Now screw in place headless screw (6) from the **inner side** of guiding cylinder and tighten these careful so that you get a gap of 0.5 mm are between guiding cylinder (1) and frame. Screw in place and tighten fixing screw (3).
Make sure that the eccentric head (2) are in the right position (not turned).

Now screw in place headless screw (6) from the **out side** of guiding cylinder (1) and tighten these careful that the frame sit close to the eccentric head. Screw in place and tighten fixing screw (3).
Make sure that the eccentric head (2) are in the right position (not turned).

Look all fixing screw (3) by screw-looking device “loctide > strong”.

This procedure carry out on all four guiding cylinder pairs.

Quick height adjustment

Basic adjustment of adjustment spindle

By a replacement of the adjustment spindle or spindle nut it is necessary to make a basic adjustment of it.

This adjustment determines the axial freedom of movement.
Afterwards adjust of angle of attack between hydraulic extension to the mean screed (see page 32).

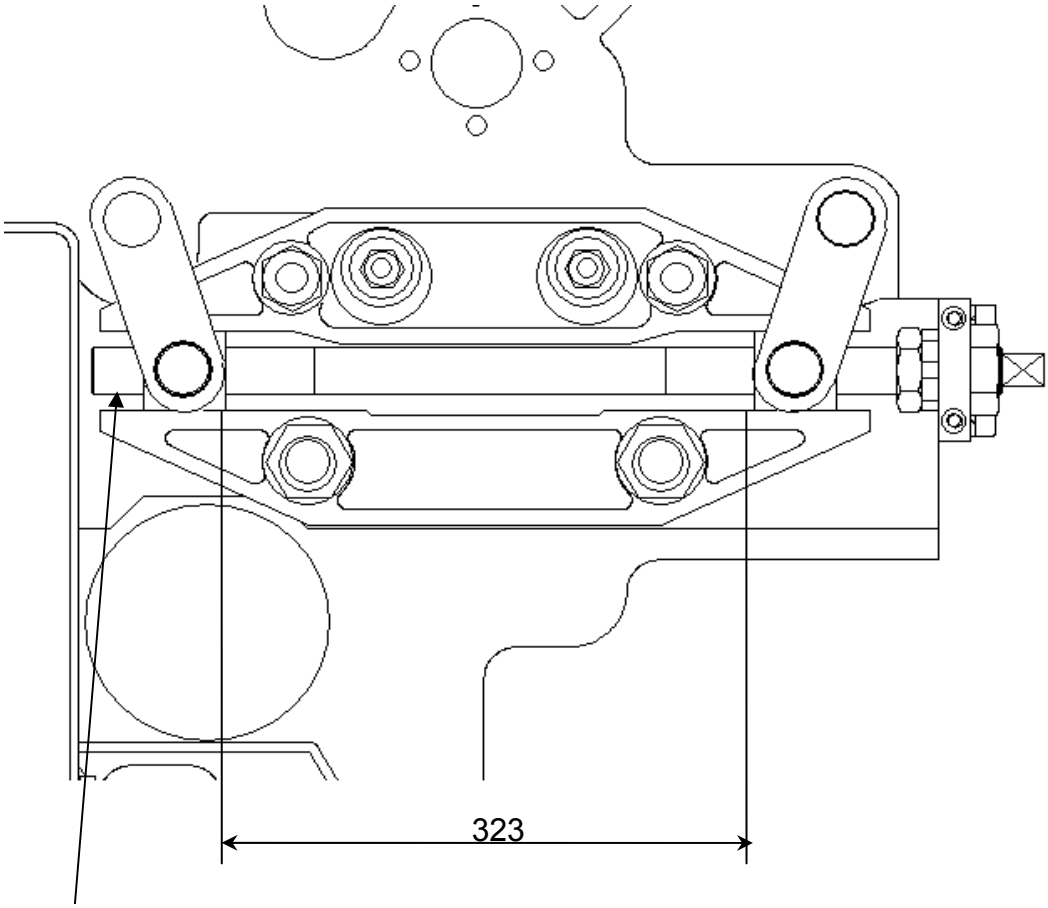

Measurement of spindle end > Spindle nut = 20 mm

Height adjustment

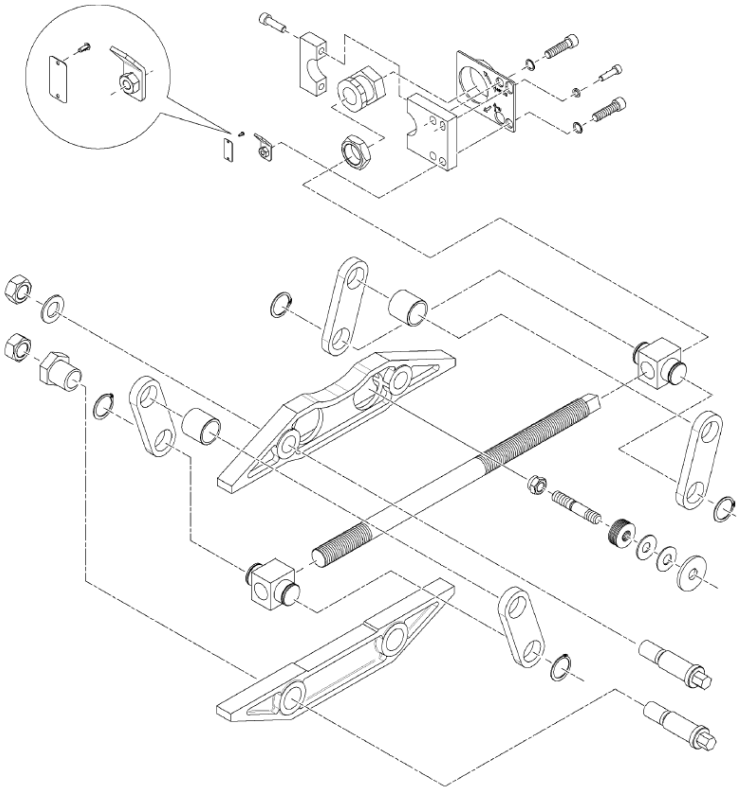

To assure a good movement of hydraulic extensions part by final adjustment, it is necessarry to preload the disc spring (~25mm). (see picture I)

Attention: The measurement described only the disc spring!

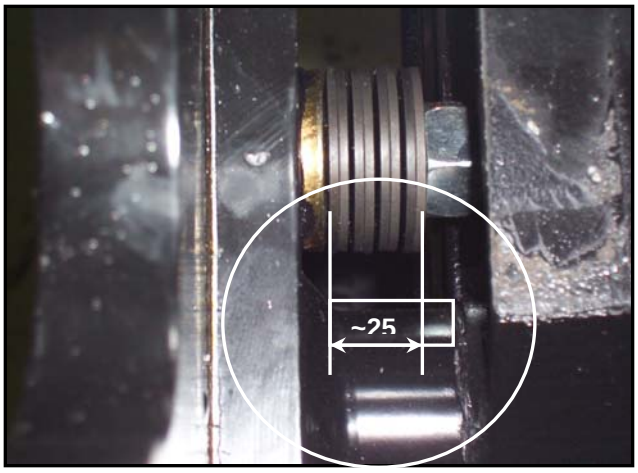

Bild I

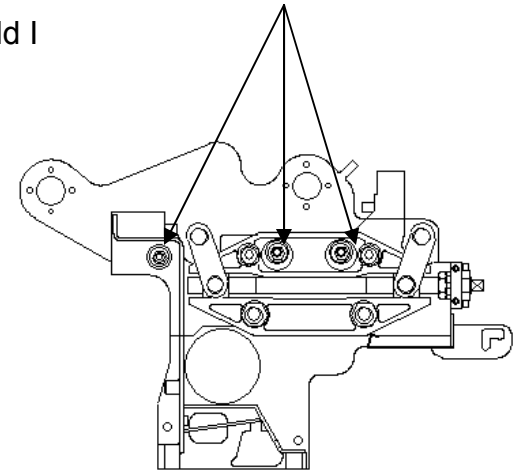

Hydraulic extension

Basic adjustment

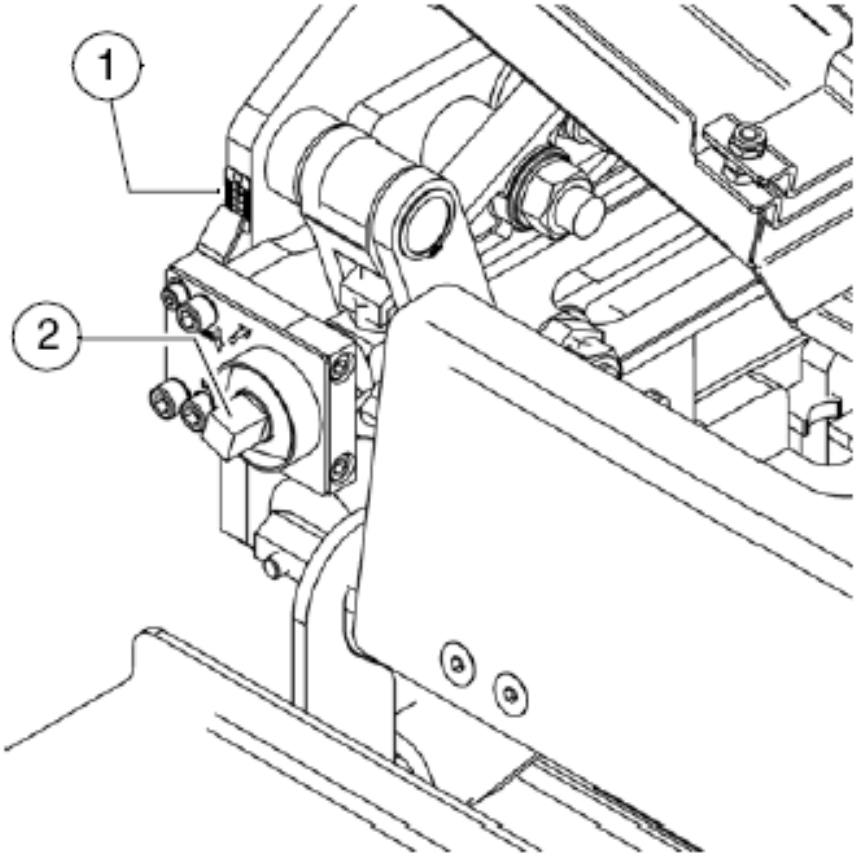

Hydraulic extension

Basic adjustment

To ensure that the screed lays without marks and the extensions can be adjusted also during use to the various operating conditions, the extensions can be adjusted for lowering angle and height.

Provided at each extension are two spindles (02)with which the lowering angle of the extensions can be adjusted in relation to the basic screed with a ratchet.
The scales (01) shows the level adjustment in millimetre.

Factory adjustment

The extensions are adjusted at the works in such a way that these stand 3 mm higher on the inner and outer side than the basic screed. The scales (01) are set to ”0” with this adjustment.

Adjusting extension height

If the screed extensions do not lay without marks, this can be corrected during laying.

Turning the spindle (02) counter-clockwise with the ratchet lifts the screed extension Sections.
Turning the spindle (02) clockwise with the ratchet lowers the screed extension sections.

For a parallel adjustment of screed extension parts, adjust the inner side and outside constant.

Hydraulic extension

Basic adjustment

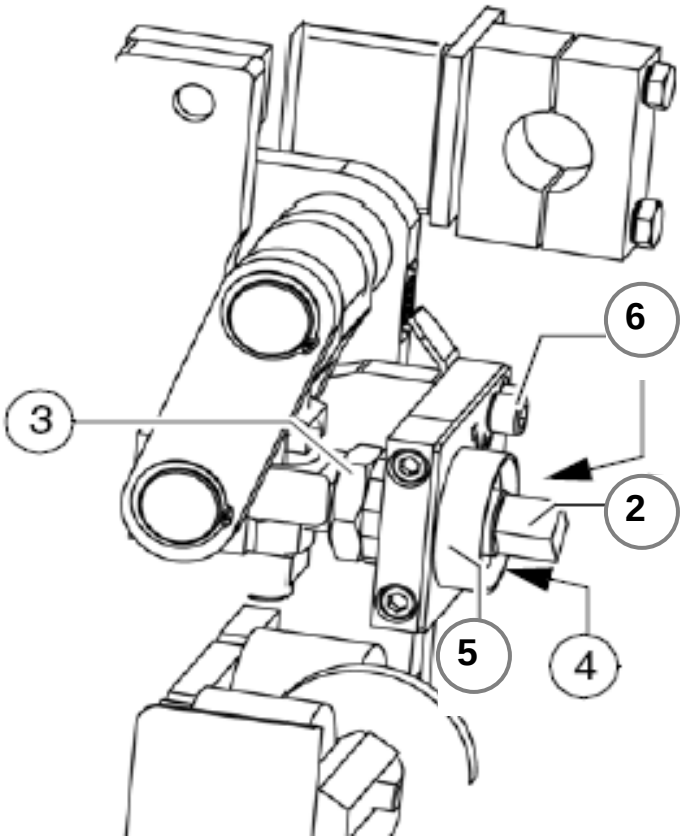

Hydraulic extension

Basic adjustment

Adjustment of angle

The centre and screed extension sections are adjusted parallel to each other at the works.

The lowering angle of the screed extension sections can be varied in relation to the centre sections if required:

Pay attention !

This adjustment is to control by a gauge length because the scale will be reverence point on the rear side only.
To change / adjust the angle during paving shut be in exceptional cases only.

Implementation

Remove cylinder head screw (6) and the looking plate (5).
Unscrew the counternut (3).
Turn adjusting nut (4) with an open-end wrench. Spindle (2)must not also turn.

Turning clockwise = Increases lowering angle

Turning counter-clockwise = Reduces lowering angle

Evenly adjust both adjusting nuts (4) at each extension alternately.

Tighten lock nut (3) and fix the locking plate (5).

Main screed EB 51 / EB 60 / VB 510 / VB 600

Hydraulic connections

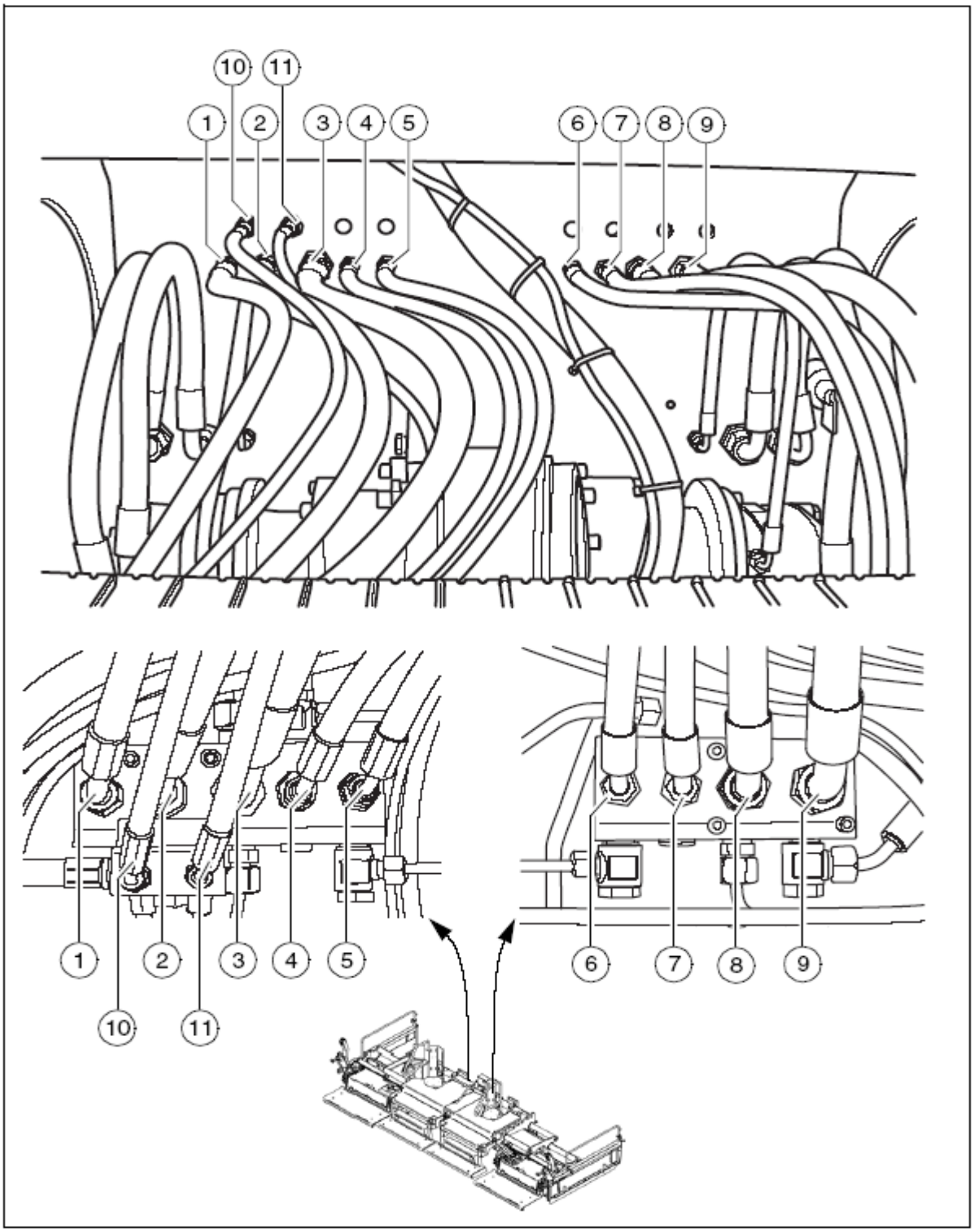

Main screed EB 51 / EB 60 / VB 510 / VB 600

Hydraulic connections

The hydraulic connections are on the rear of the finisher.

When installing the hydraulic connections, hot hydraulic oil can spurt out under high pressure.

Switch off the motor and depressurise the hydraulic system! Protect the eyes!

When installing the hydraulic connections, make sure the environment is absolutely clean.
Dirt in the hydraulic oil can cause the machine to fail!

Position and designation of the connections:

Pos.	Designation
1	Leak oil line
2	Vibration, pressure line
3	Vibration, return
4	Extend screed, left
5	Retract screed, left
6	Retract screed, right
7	Extend screed, right
8	Tamper, pressure line
9	Tamper, return
10	Crowning adjuster
11	Crowning adjuster

Main screed

Basic setting with quick adjustment

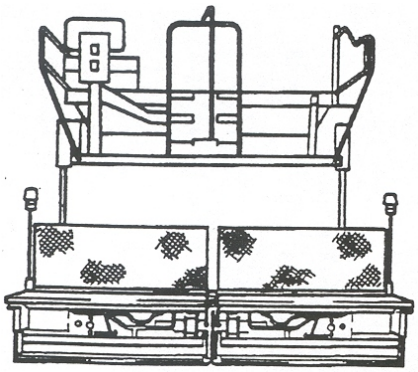

Picture 1

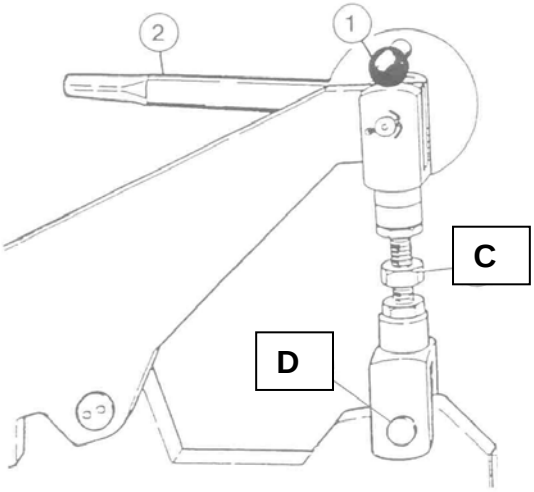

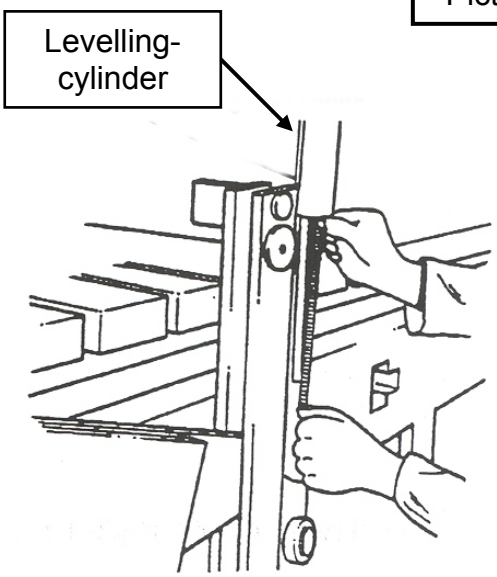

Picture 2

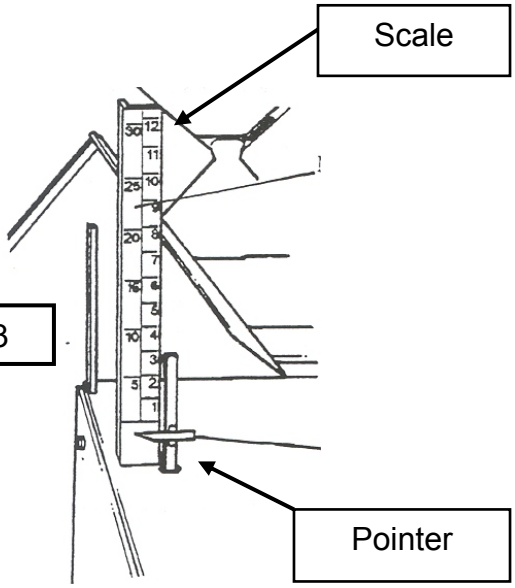

Picture 3

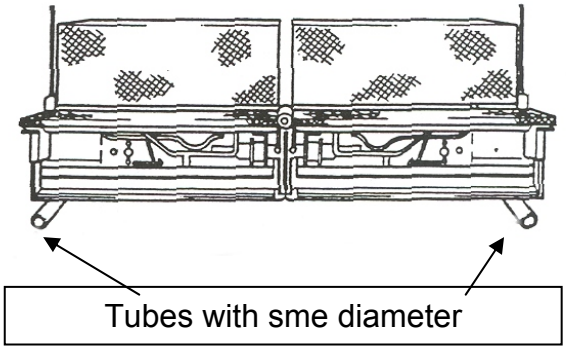

Picture 4

Main screed

Basic setting with quick adjustment

Prior to basic adjustment, the extension sections must be adjusted as described from page 36.

Implementation:

- In case of wheeled Paver, adjust the correct tyre pressure.
- Drive the Paver on a level surface. The size of the area must correspond to the total base of the Paver. The engine must remain in operation. (picture 1)
- Adjust the crown profile to zero.
- Position of Paver shut be so that the guiding rollers of screed arms are in contact with the guiding plates of frame.
- Wheel Paver ⇒ Forward reverse lever in neutral position and set the lever of the switchbox to the zero position too.
- Crawler Paver ⇒ Select the switch to “turning on spot” and steering potentiometer in middle position.
- Activate floating position of screed and put the drive lever in front.
  Note ! The engine must remain in operation (idle speed).

I. Take out bolts (D) of the spindle (E).
   The screed should behave contact with the ground (see picture 1)

II. Extend both levelling cylinder completely. Than retract both levelling cylinder by 30 mm, measuring with a measuring tape. (see picture 2)

III. Set the pointer of levelling scale to zero position and tighten the look screws. (see picture 3)

By the SD pavers II + III are not applicable. Retract both levelling cylinders, so that the pointers of levelling scale are on „zero position“.

IV. Lift up the screed and position two tubes (at least 1 m long) with the same diameter under the screed. (picture 4)

V. Make sure that the screed remains in floating position and forward reverse lever in front.
   Pay attention! The engine must remain in operation (idle speed).

- Retract both levelling cylinders until the Pointers are at the same position that the diameter of the tubes.
-
  Example: Tube diameter 60 mm = reading on the scale 6 cm.

Main screed

Basic setting with quick adjustment

VI. The screed has to rest with the rear edges of main screed and extension parts on the tube.

- The front edge of main screed has to have a certain distance from the tube of 3 mm.

Adjustment

- Loose both lock nuts of the screed – side arm spindle and adjust with the corresponding nut until the correct distance is achieved.
- Control the distance and look the nuts. (see picture 5)

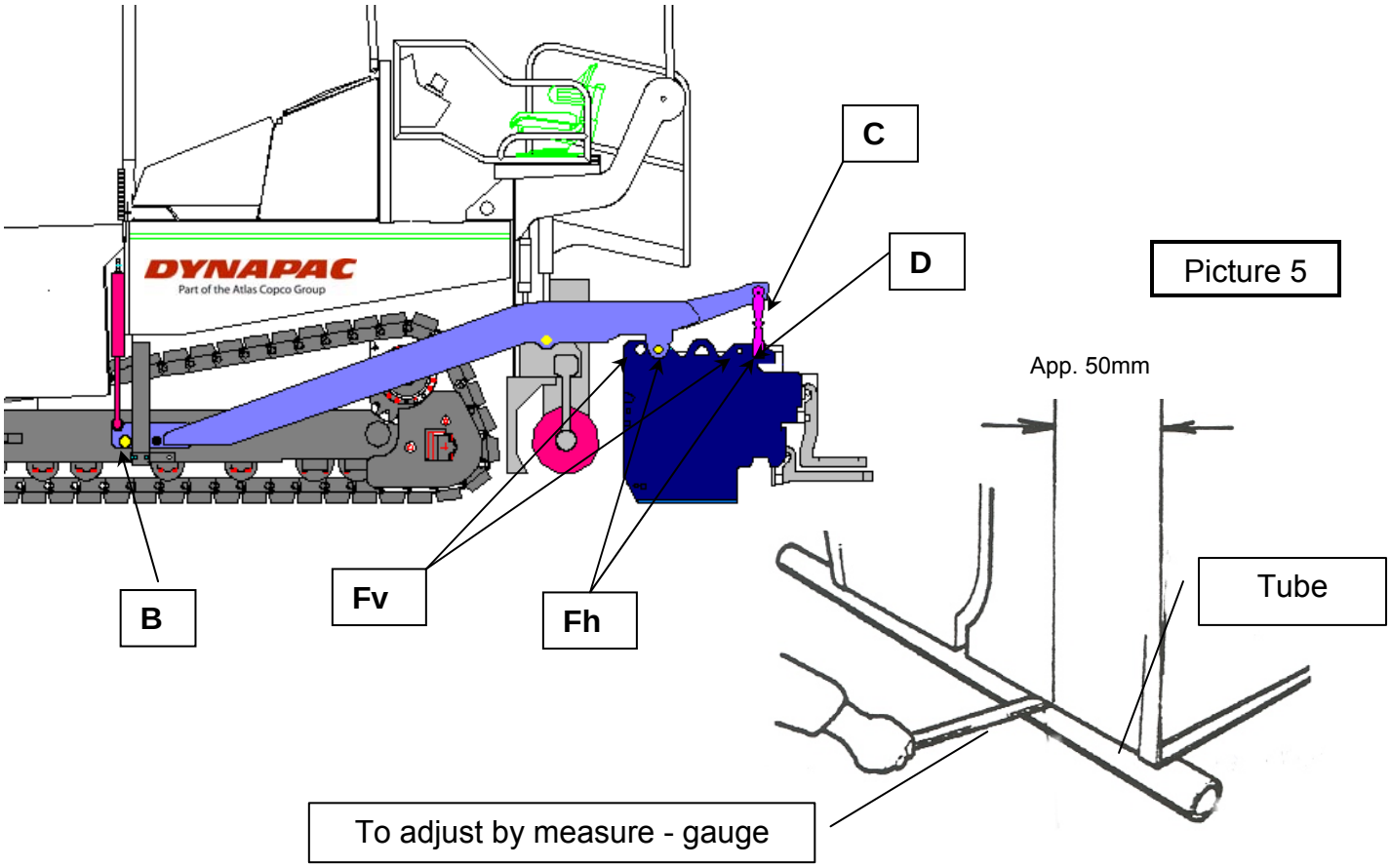

Paving of extreme laying thickness

It's possible to get an open structure and a insufficient compaction by paving a laying thickness above approx. 20 cm.
The reason could be a to low mix material flow in front of the screed.
To solve this problem it's necessary to extend the distance between auger and screed.
In this case are the front fixing holes of the screed in use. (See page 44,"Fv").

Note !

- To avoid a wavy surface by paving a laying thickness less than 20 cm, it's necessary to use the rear fixing holes (see page 44, "Fh").
- Keep clear that the mix material quantity in front of the screed is in normal conditions.

Main screed

Basic setting with quick adjustment

Adjustment angle of attack by different laying thickness

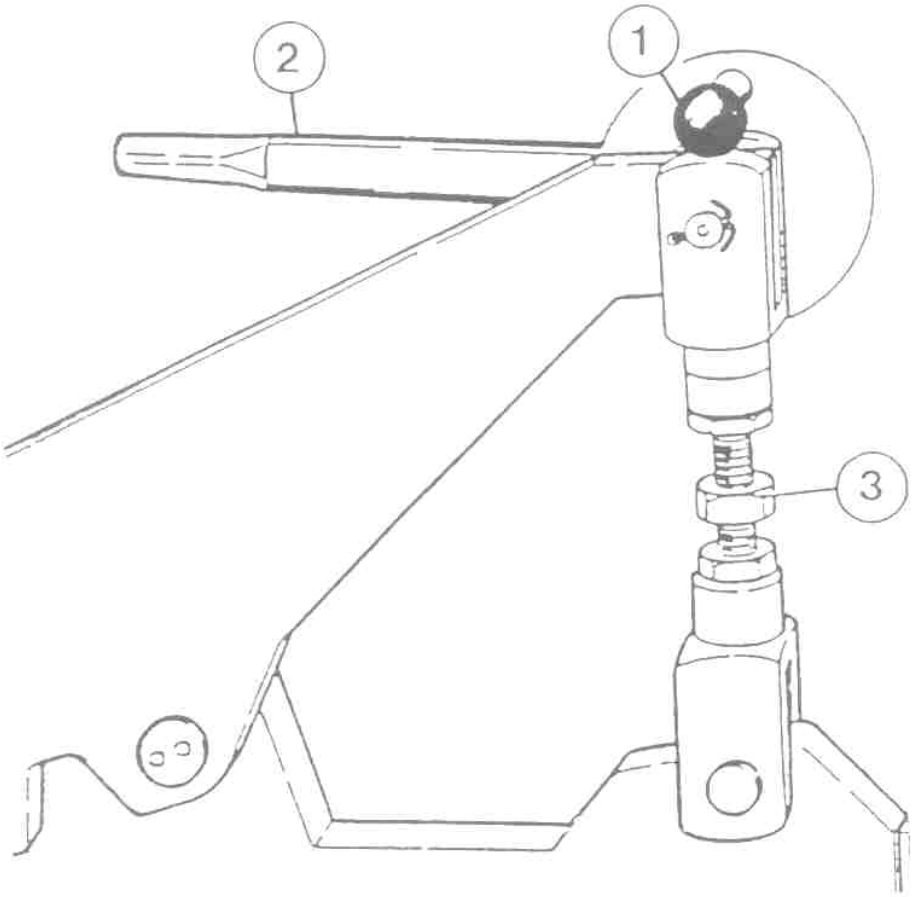

← Forward direction

Main screed

Basic setting with quick adjustment

Adjustment angle of attack by different laying thickness

In case that a control of laying thickness is not possible because the levelling cylinder are in the end top position, then is possible or necessary to adjust the angle of attack with help of angle quick adjustment device.
In this case spindle (3) will be not regulate

Pos. I	Lever in forward direction	⇒	Laying thickness until about 7 cm
Pos. II	Lever in vertical position	⇒	Laying thickness from 7 to 14 cm
Pos. III	Lever to the rear	⇒	Laying thickness over 14 cm

Example
Change the angle from position I in position II.

Loose the blocking lever (1) and move the lever to vertical position.
The eccentric push the screed rear edge down.
The angle will be bigger ⇒ The screed is driving upwards.

The adjustment of angle with help of angle quick adjustment device shut be make on both sides to the same time by paving only, because through the fast reaction of screed could it be that you get bumps on the surface.
To avoid this problem adjust the right angle before paving.

Main screed

Basic setting without quick adjustment

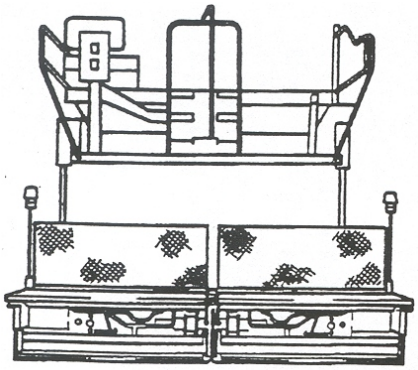

Picture 1

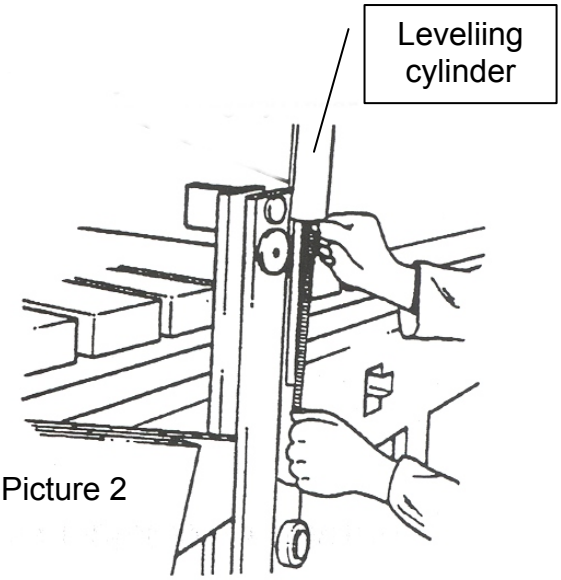

Picture 2

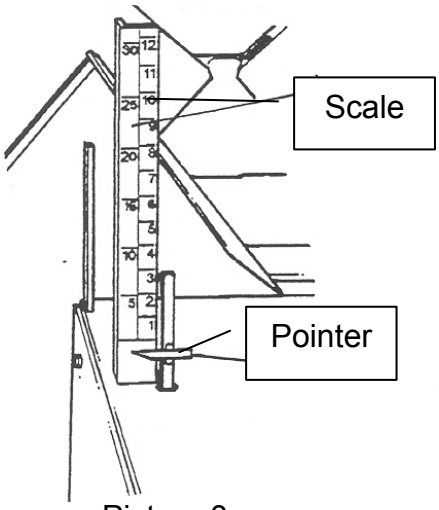

Picture 3

Picture 4

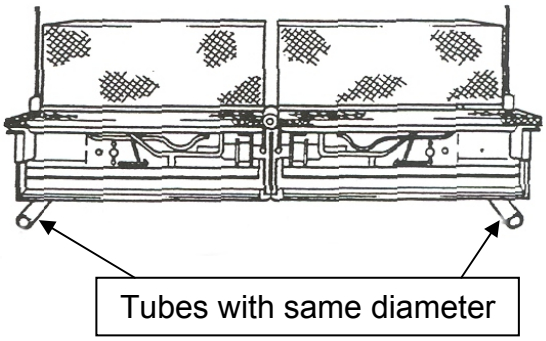

Main screed

Basic setting without quick adjustment

Prior to basic adjustment, the extension sections must be adjusted as described in page 36.

Implementation

- In case of wheeled Paver, adjust the correct tyre pressure.
- Drive the Paver on a level surface. The size of the area must correspond to the total base of the Paver. The engine must remain in operation. (picture 1)
- Adjust the crown profile to zero.
- Position of Paver shut be so that the guiding rollers of screed arms are in contact with the guiding plates of frame.
- Wheel Paver ⇒ Forward reverse lever in neutral position and set the lever of the switchbox to the zero position too.
- Crawler Paver ⇒ Select the switch to “turning on spot” and steering potentiometer in middle position.
-
- Extend both levelling cylinder completely. Than retract both levelling cylinder by 30 mm, measuring wit a measuring tape. (picture 2)
  SD – Paver: retract both levelling cylinder 70mm.
- Set the pointer of levelling scale to zero position and tighten the look screws. (picture 3)
- Lift up the screed and position two tubes (at least 1 m long) with the same diameter under the screed. (picture 4)
- Make sure that the screed remains in floating position and forward reverse lever in front.
  Pay attention! The engine must remain in operation (idle speed).
- Retract both levelling cylinders until the Pointers are at the same position that the diameter of the tubes.
  Example: Tube diameter 60 mm = reading on the scale 6 cm.

Main screed

Basic setting without quick adjustment

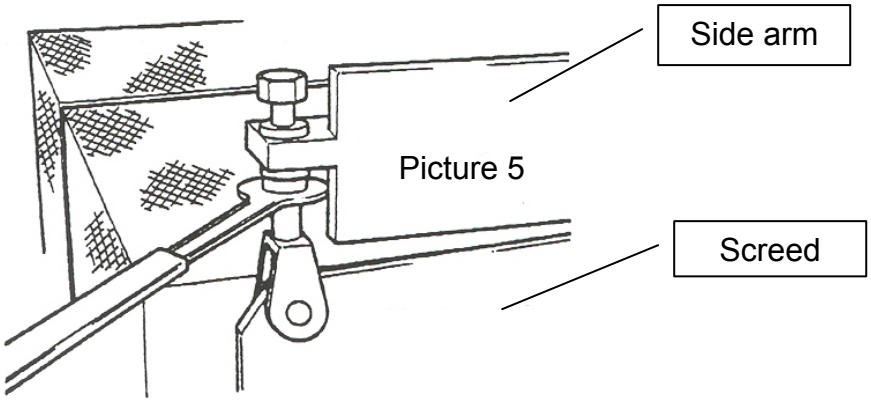

Picture 5

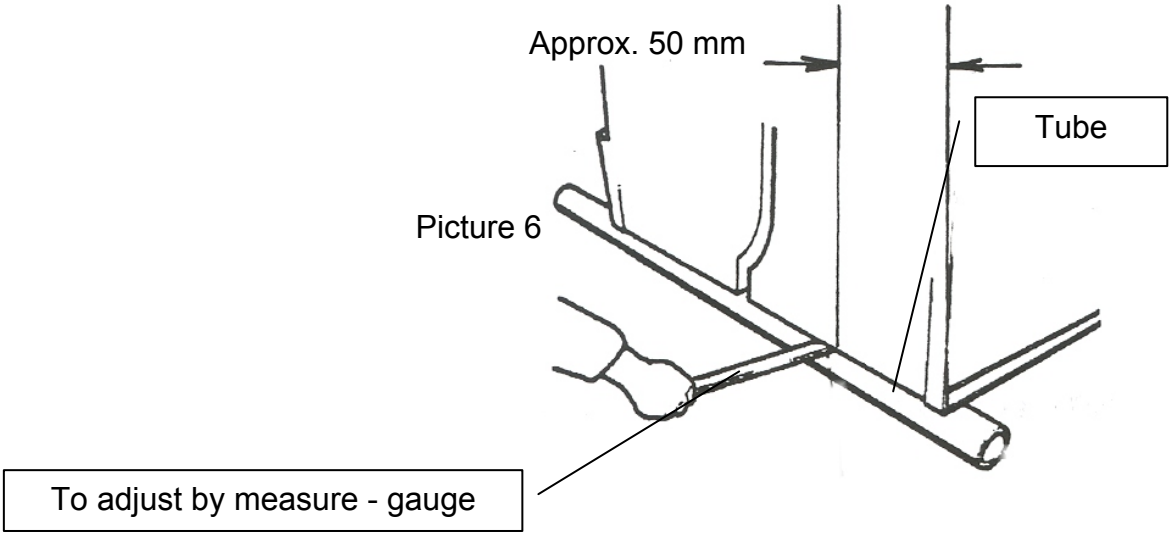

Picture 6

Main screed

Basic setting without quick adjustment

- The screed has to rest with the rear edges of main screed and extension parts on the tube.
- The front edge of main screed has to have a certain distance from the tube of 3 mm

Adjustment

- Loose both lock nuts of the screed – side arm spindle and adjust with the corresponding nut until the correct distance is achieved. (picture 5)
- Control the distance and look the nuts. (picture 6)