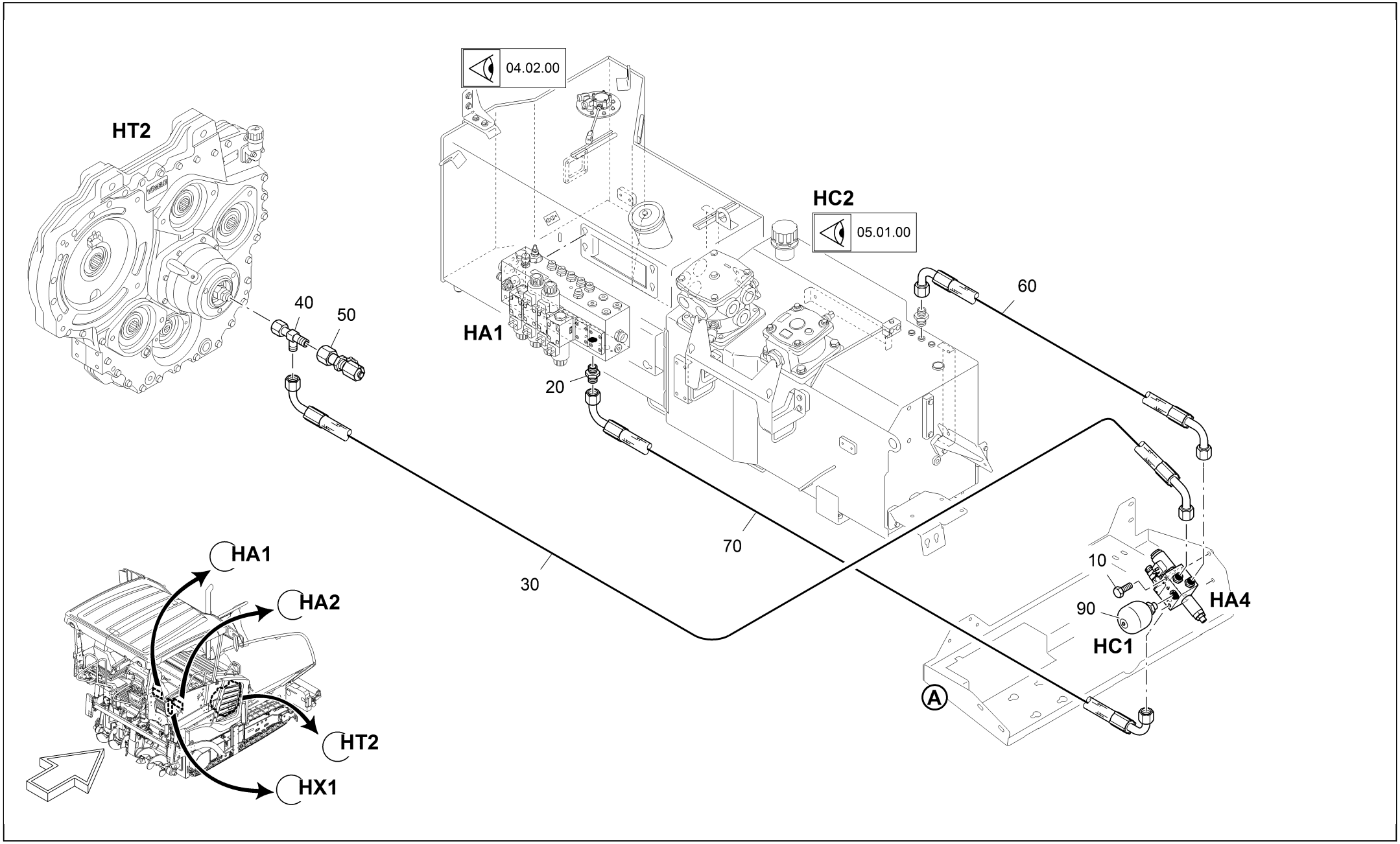
04.02.00
HT2
HC2
05.01.00
40
50
60
HA1
20
70
30
10
90
HA4
HC1
A
HA1
HA2
HT2
HX1

Item	*Part no.*	*Designation*	*Quantity*	*Quantity unit*	*Serial number from*	*Serial number to*
10	9508380933	SCREW	2	PC	10	9999
20	9603120057	SCREW CONNECTION	1	PC	10	9999
30	2102043	HOSE	1	PC	10	9999
40	9629120057	SCREW CONNECTION	1	PC	10	9999
50	9625531000	CONNECTOR FOR MEASUREMENT	1	PC	10	9999
60	2040108	HOSE	1	PC	10	9999
70	2007238	HOSE	1	PC	10	9999
90	2319960	HYD ACCUMULATOR	1	PC	10	9999