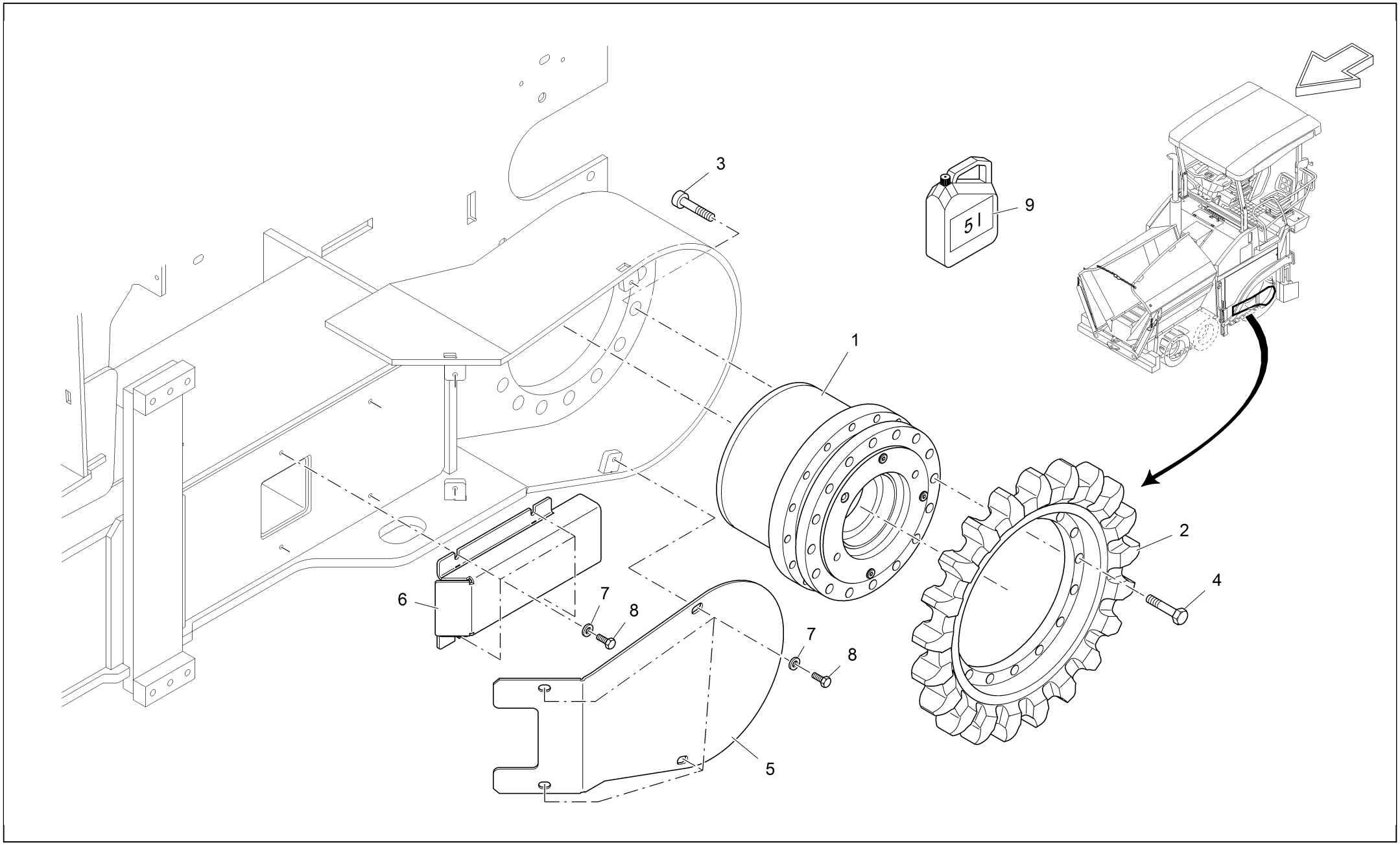
3
9
5 l
1
2
4
6
7
8
7
8
5

Item	*Part no.*	*Designation*	*Quantity*	*Quantity unit*	*Serial number from*	*Serial number to*
1	2043834	TRACTION TRANSMISSION	1	PC	10	9999
2	2043368	SPROCKET	1	PC	10	9999
3	9216340912	SCREW	16	PC	10	9999
4	9520340933	SCREW	16	PC	10	9999
5	2051757	COVER PLATE, LEFT SIDE	1	PC	10	9999
6	2055444	COVER SHEET	1	PC	10	9999
7	9500847349	WASHER	8	PC	10	9999
8	9508200933	SCREW	8	PC	10	9999
9	1238051	WGP SPECIAL GEAR OIL 5L	1	PC	10	9999