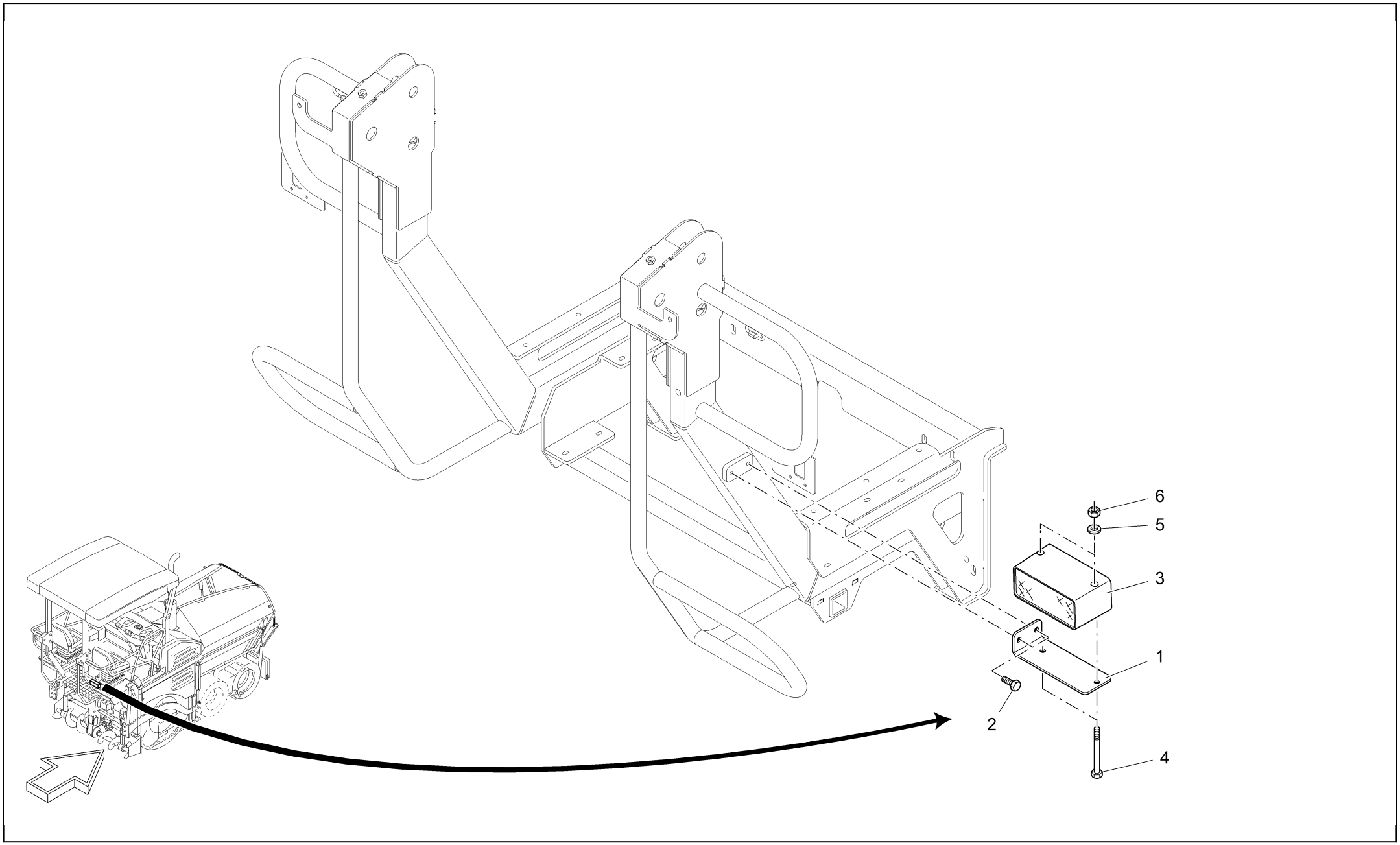
6
5
3
1
2
4

Item	*Part no.*	*Designation*	*Quantity*	*Quantity unit*	*Serial number from*	*Serial number to*
1	2055792	HOLDER	1	PC	10	9999
2	9510160933	SCREW	2	PC	10	9999
3	3515160023	REVERSE SIGNAL	1	PC	10	9999
4	9510440933	SCREW	2	PC	10	9999
5	9500100125	WASHER	2	PC	10	9999
6	9500100934	NUT	2	PC	10	9999