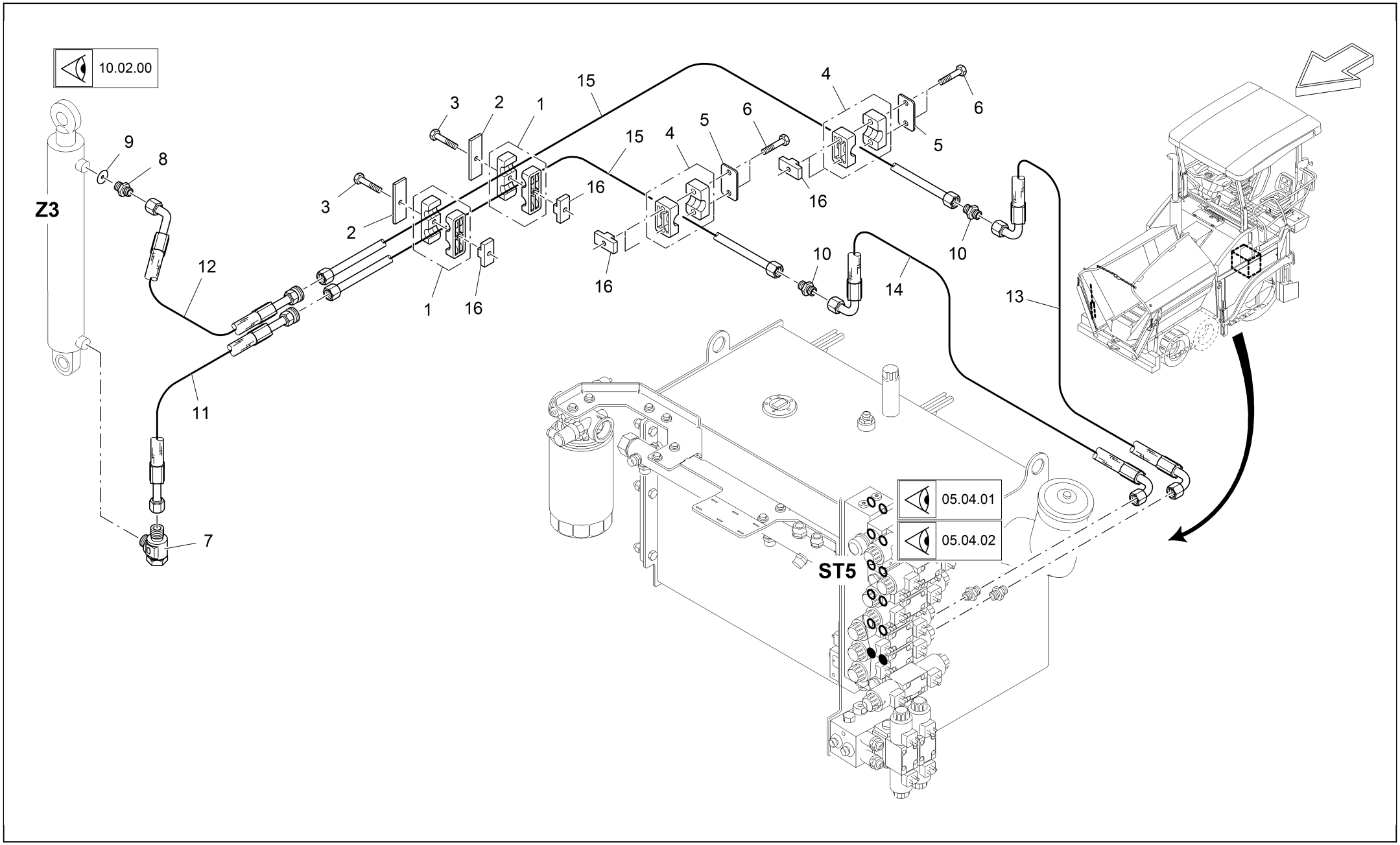
10.02.00
Z3
9
8
12
11
7
3
2
1
16
15
4
5
6
10
14
13
ST5
05.04.01
05.04.02

Item	*Part no.*	*Designation*	*Quantity*	*Quantity unit*	*Serial number from*	*Serial number to*
1	9660120185	PAIR OF CLAMPING HALVES	2	PC	10	9999
2	9685010185	TOP COVER	2	PC	10	9999
3	9506310933	SCREW	2	PC	10	9999
4	9650120185	PAIR OF CLAMPING HALVES	2	PC	10	9999
5	9680010185	TOP COVER	2	PC	10	9999
6	9506300933	SCREW	4	PC	10	9999
7	9678120058	SCREW CONNECTION	2	PC	10	9999
8	9603120057	SCREW CONNECTION	1	PC	10	9999
9	4602272032	ORIFICE PLATE	1	PC	10	9999
10	9521203902	SCREW CONNECTION	2	PC	10	9999
11	2065939	HOSE	1	PC	10	9999
12	2065940	HOSE	1	PC	10	9999
13	2065925	HOSE	1	PC	10	9999
14	2065935	HOSE	1	PC	10	9999
15	2067225	PIPE	2	PC	10	9999
16	9695010185	NUT	6	PC	10	9999