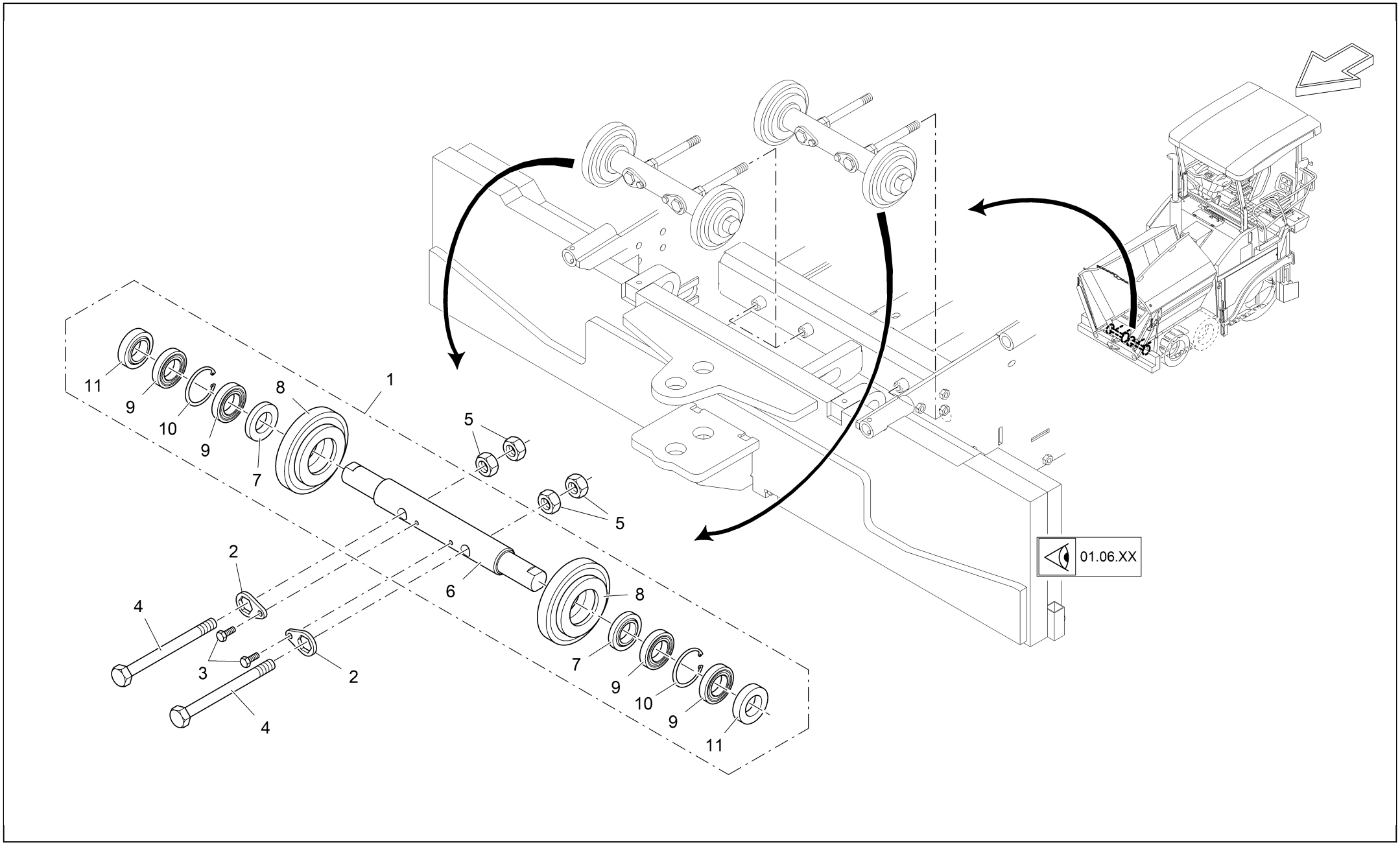
1
2
3
4
5
6
7
8
9
10
11
01.06.XX

Item	*Part no.*	*Designation*	*Quantity*	*Quantity unit*	*Serial number from*	*Serial number to*
1	2044052	RETURN PULLEY COMPL.	2	PC	10	9999
2	4602426977	METAL PLATE	4	PC	10	9999
3	9508160933	SCREW	4	PC	10	9999
4	9516580933	SCREW	4	PC	10	9999
5	9500160934	NUT	8	PC	10	9999
6	2044047	AXLE SHAFT	1	PC	10	9999
7	4604172130	DISTANCE RING	2	PC	10	9999
8	4617022025	DEFLECTION ROLLER	2	PC	10	9999
9	9509070625	BALL BEARING	4	PC	10	9999
10	9500620472	SEEGER CIRCLIP RING	2	PC	10	9999
11	4604172131	DISTANCE RING	2	PC	10	9999