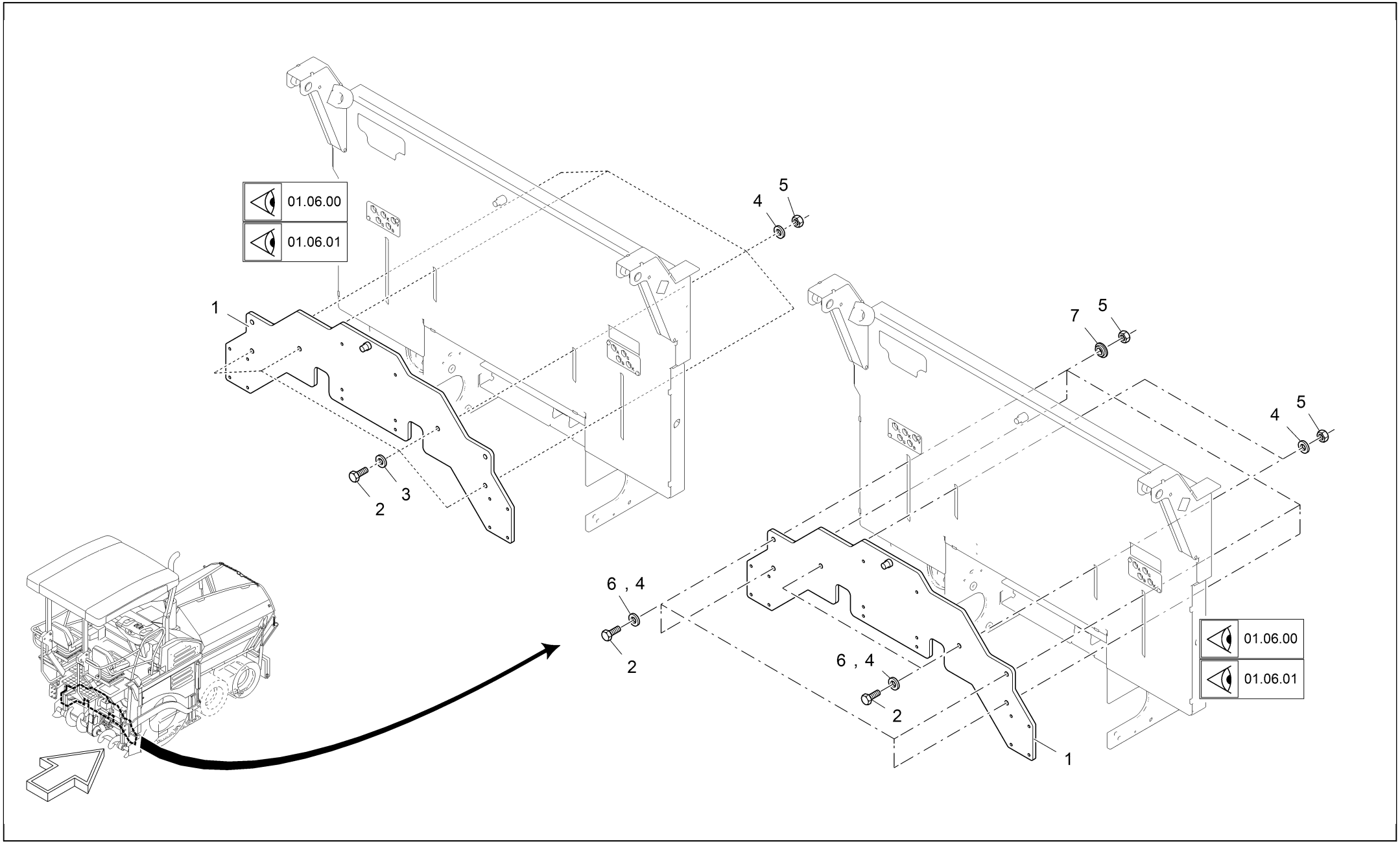
01.06.00
01.06.01
1
2
3
4
5
6 , 4
7

Item	*Part no.*	*Designation*	*Quantity*	*Quantity unit*	*Serial number from*	*Serial number to*
1	2052587	TRAVERSE	1	PC	10	9999
2	9520360933	SCREW	6	PC	251	9999
2	9520360933	SCREW	4	PC	10	250
3	9500220125	WASHER	4	PC	10	250
4	9502107349	WASHER	8	PC	334	9999
4	9502107349	WASHER	4	PC	10	250
4	9502107349	WASHER	2	PC	251	333
5	9500200980	NUT	6	PC	251	9999
5	9500200980	NUT	4	PC	10	250
6	9500210125	WASHER	6	PC	251	333
7	2130972	BUSHING WITH COLLAR	4	PC	251	9999