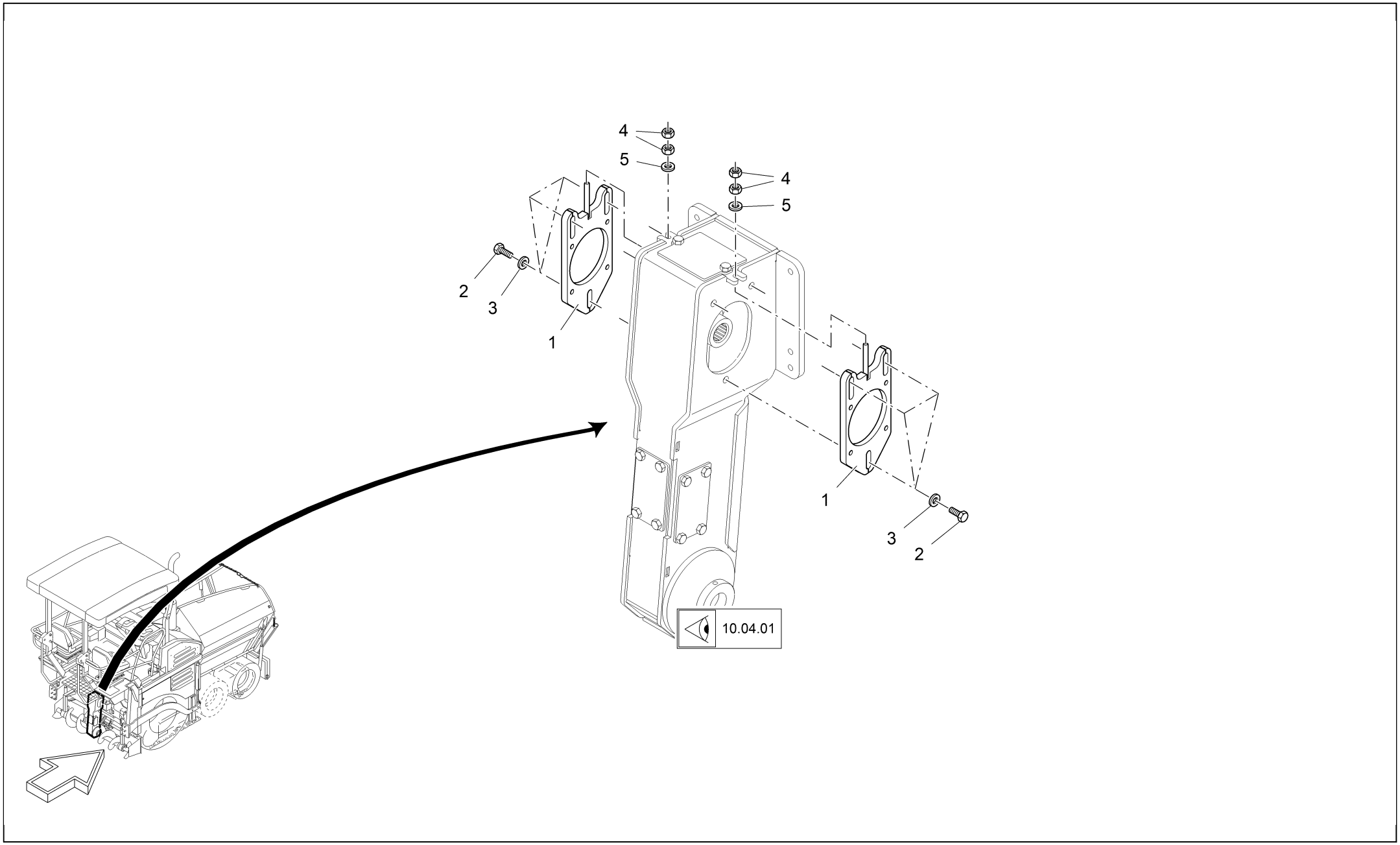
4
5
4
5
2
3
1
1
3
2
10.04.01

Item	*Part no.*	*Designation*	*Quantity*	*Quantity unit*	*Serial number from*	*Serial number to*
1	2030344	FLANGE	2	PC	10	329
2	9512320933	SCREW	6	PC	10	329
3	9501307349	WASHER	6	PC	10	329
4	9500100934	NUT	4	PC	10	329
5	9501057349	WASHER	2	PC	10	329