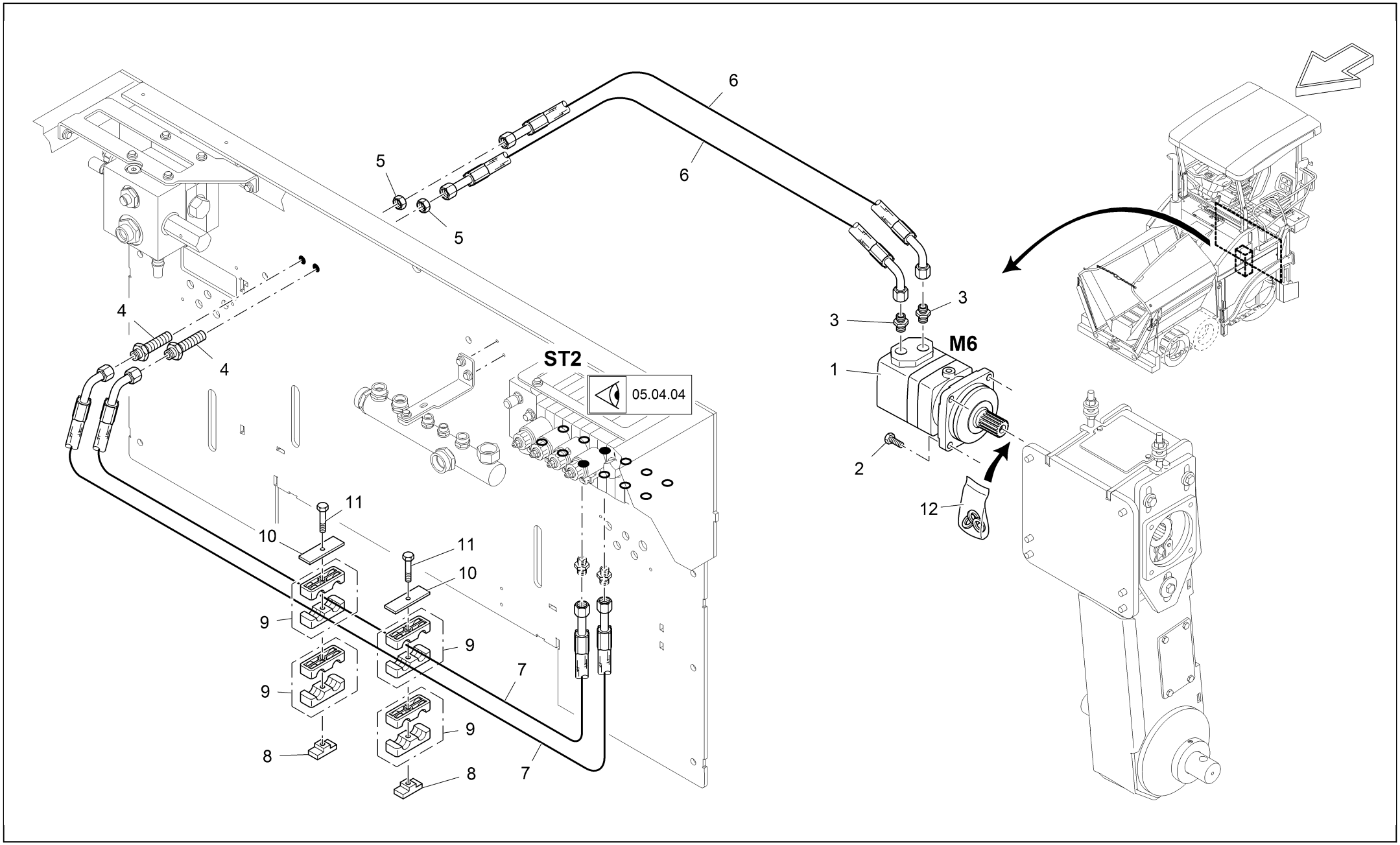
6
6
5
5
4
4
3
3
M6
1
2
12
ST2
05.04.04
11
10
11
10
9
9
9
9
7
7
8
8

Item	*Part no.*	*Designation*	*Quantity*	*Quantity unit*	*Serial number from*	*Serial number to*
1	9629711000	HYDRAULIC MOTOR	1	PC	10	9999
2	9512300933	SCREW	4	PC	10	9999
3	9602110057	SCREW CONNECTION	2	PC	10	9999
4	9521203910	SCREW CONNECTION	2	PC	10	9999
5	9630180010	NUT	2	PC	10	9999
6	2077968	HOSE	2	PC	10	9999
7	2078989	HOSE	2	PC	10	9999
8	9695030185	NUT	2	PC	10	9999
9	9660180185	PAIR OF CLAMPING HALVES	4	PC	10	9999
10	9685020185	TOP COVER	2	PC	10	9999
11	9508360933	SCREW	2	PC	10	9999
12	9609521001	SET OF SEALS	1	PC	10	9999