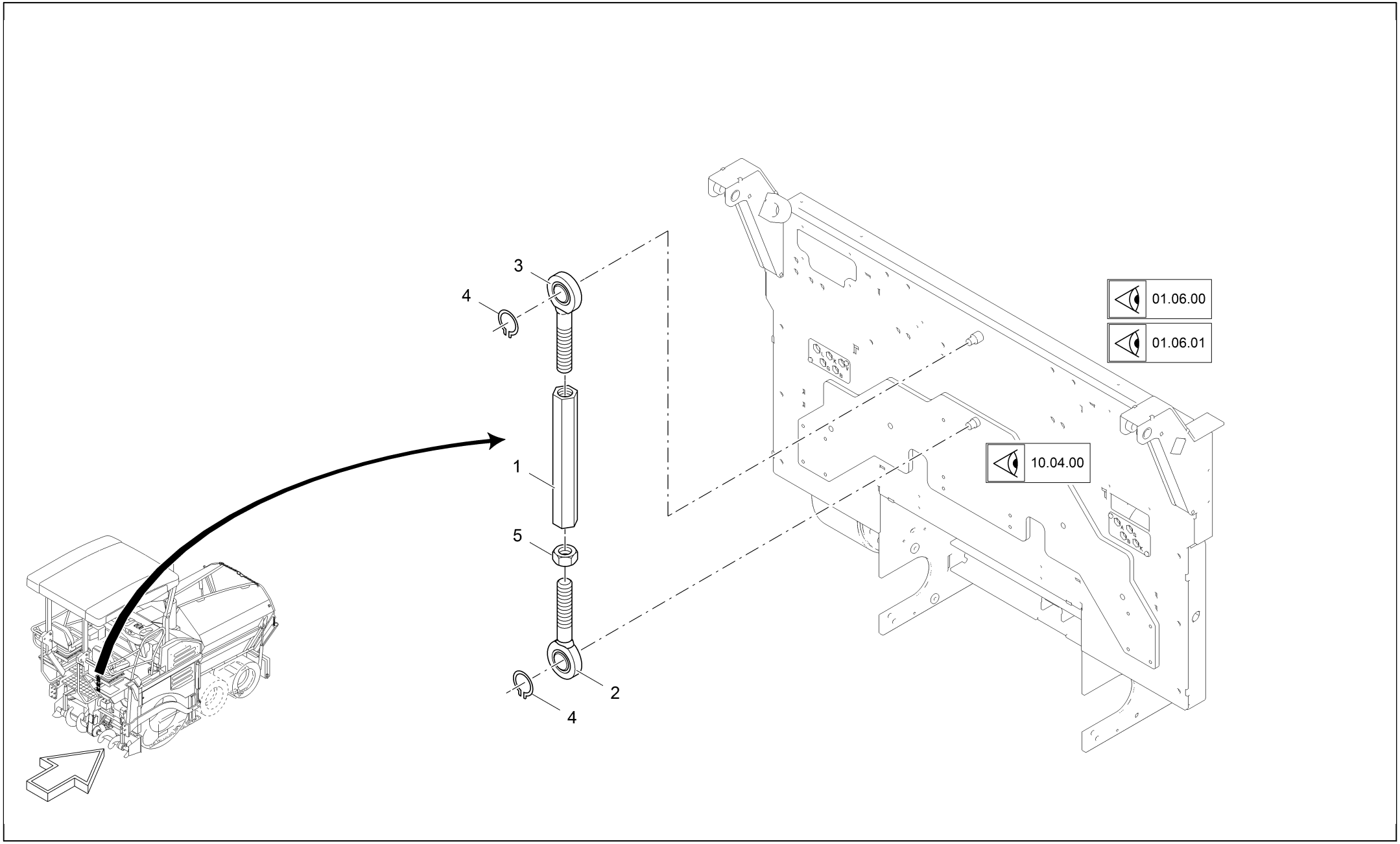
3
4
1
5
2
4
01.06.00
01.06.01
10.04.00

| *Item* | *Part no.* | *Designation* | *Quantity* | *Quantity unit* | *Serial number from* | *Serial number to* |
|---|---|---|---|---|---|---|
| 1 | 2065526 | HEXAGONAL STEEL | 1 | PC | 10 | 9999 |
| 2 | 2065517 | JOINT HEAD | 1 | PC | 10 | 9999 |
| 3 | 2065826 | JOINT HEAD | 1 | PC | 10 | 9999 |
| 4 | 9500200471 | SEEGER CIRCLIP RING | 2 | PC | 10 | 9999 |
| 5 | 9515200439 | NUT | 1 | PC | 10 | 9999 |