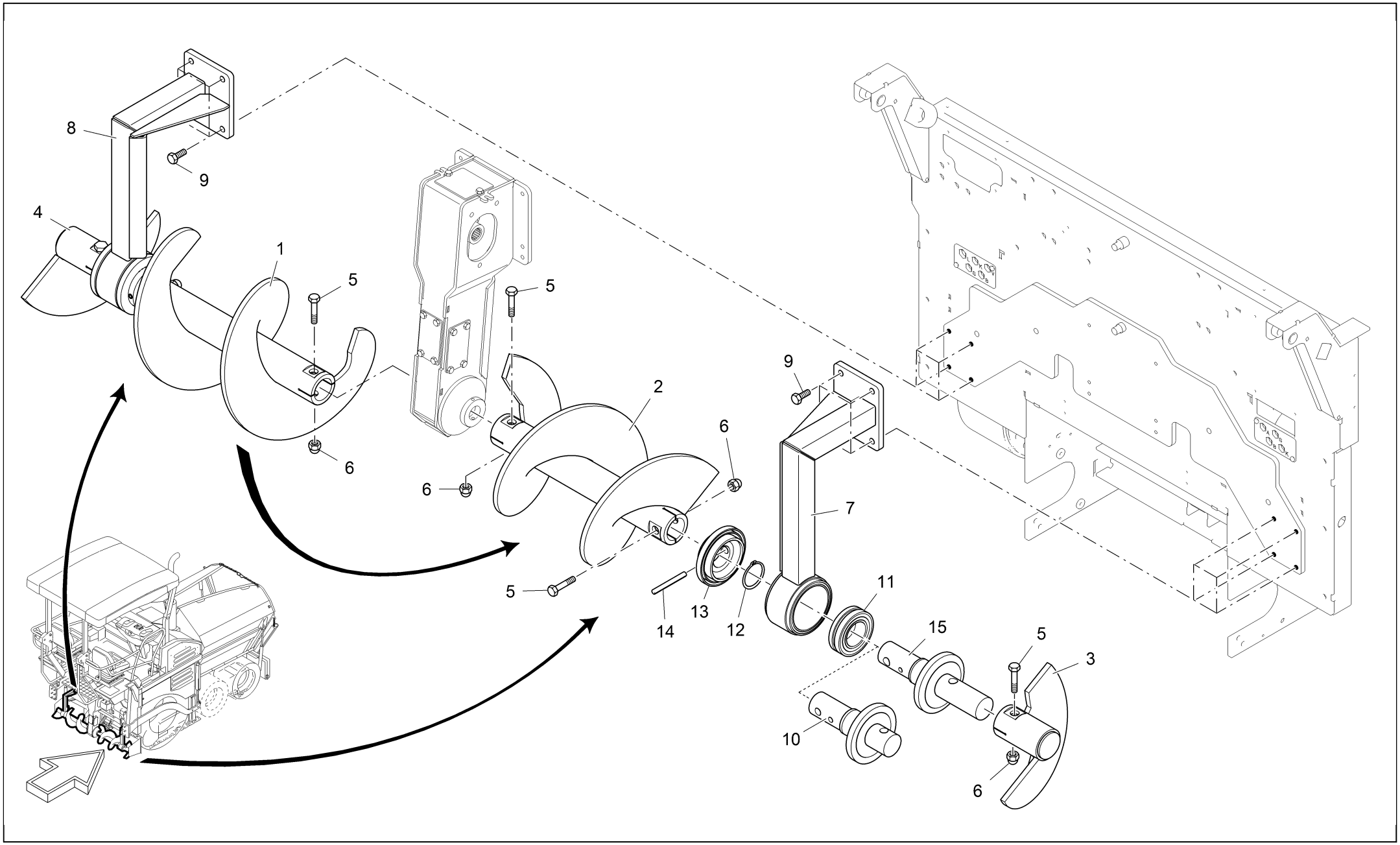

VÖGELE

Item	*Part no.*	*Designation*	*Quantity*	*Quantity unit*	*Serial number from*	*Serial number to*
1	2053650	AUGER SHAFT, LEFT SIDE	1	PC	10	329
2	2052810	AUGER SHAFT, RIGHT SIDE	1	PC	10	329
3	2052804	AUGER, END CAP RH	1	PC	10	329
4	2053702	AUGER, END CAP LH	1	PC	10	329
5	9516390931	SCREW	6	PC	10	329
6	9500161587	CAP NUT	6	PC	10	329
7	2052798	BEARING BLOCK, RIGHT SIDE	1	PC	10	329
8	2053390	BEARING BLOCK, LEFT SIDE	1	PC	10	329
9	9512250933	SCREW	8	PC	10	329
10	2052802	TENON	2	PC	10	203
11	2044482	SPHERICAL ROLLER BEARING	2	PC	10	329
12	9500550471	SEEGER CIRCLIP RING	2	PC	10	329
13	2052803	LID	2	PC	10	329
14	9510421481	TENSIONER PIN	2	PC	10	329
15	2115408	TENON	2	PC	204	329