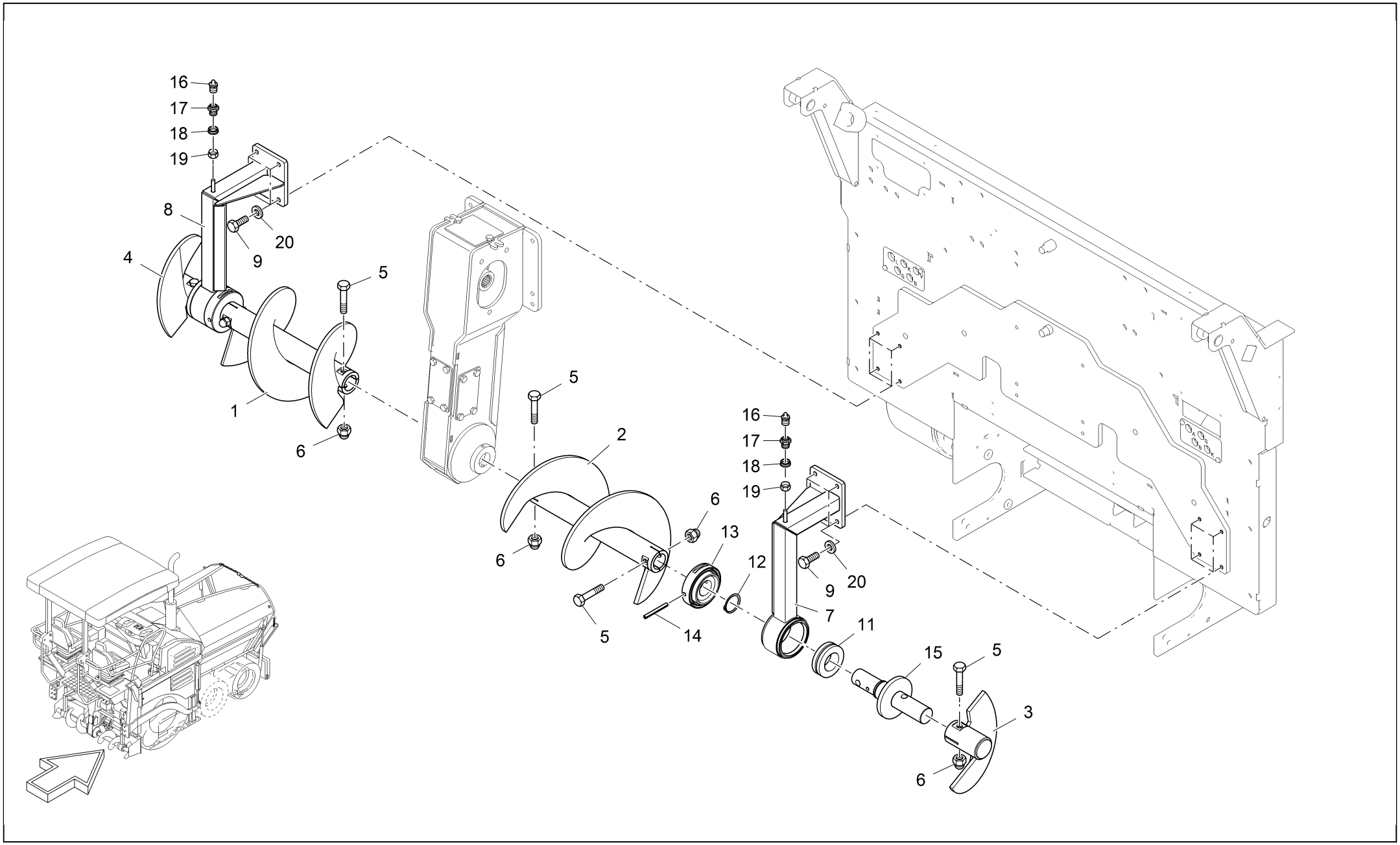
16
17
18
19
8
20
9
4
5
1
6
5
2
6
6
13
12
5
14
16
17
18
19
9
20
7
11
15
5
3
6

Item	*Part no.*	*Designation*	*Quantity*	*Quantity unit*	*Serial number from*	*Serial number to*
1	2053650	AUGER SHAFT, LEFT SIDE	1	PC	330	543
2	2052810	AUGER SHAFT, RIGHT SIDE	1	PC	330	543
3	2052804	AUGER, END CAP RH	1	PC	330	543
4	2053702	AUGER, END CAP LH	1	PC	330	543
5	9516390931	SCREW	6	PC	330	543
6	9500161587	CAP NUT	6	PC	330	543
7	2165722	BEARING BLOCK, RIGHT SIDE	1	PC	330	543
8	2165687	BEARING BLOCK, LEFT SIDE	1	PC	330	543
9	9512300933	SCREW	8	PC	330	543
11	2044482	SPHERICAL ROLLER BEARING	2	PC	330	543
12	9500550471	SEEGER CIRCLIP RING	2	PC	330	543
13	2052803	LID	2	PC	330	543
14	9510421481	TENSIONER PIN	2	PC	330	543
15	2115408	TENON	2	PC	330	543
16	9601580054	GREASING NIPPLE	2	PC	330	543
17	9688100058	SCREW CONNECTION	2	PC	330	543
18	9604100057	CUTTING RING	2	PC	330	543
19	9628100058	SCREWED CAP	2	PC	330	543
20	9500130125	WASHER	8	PC	330	543