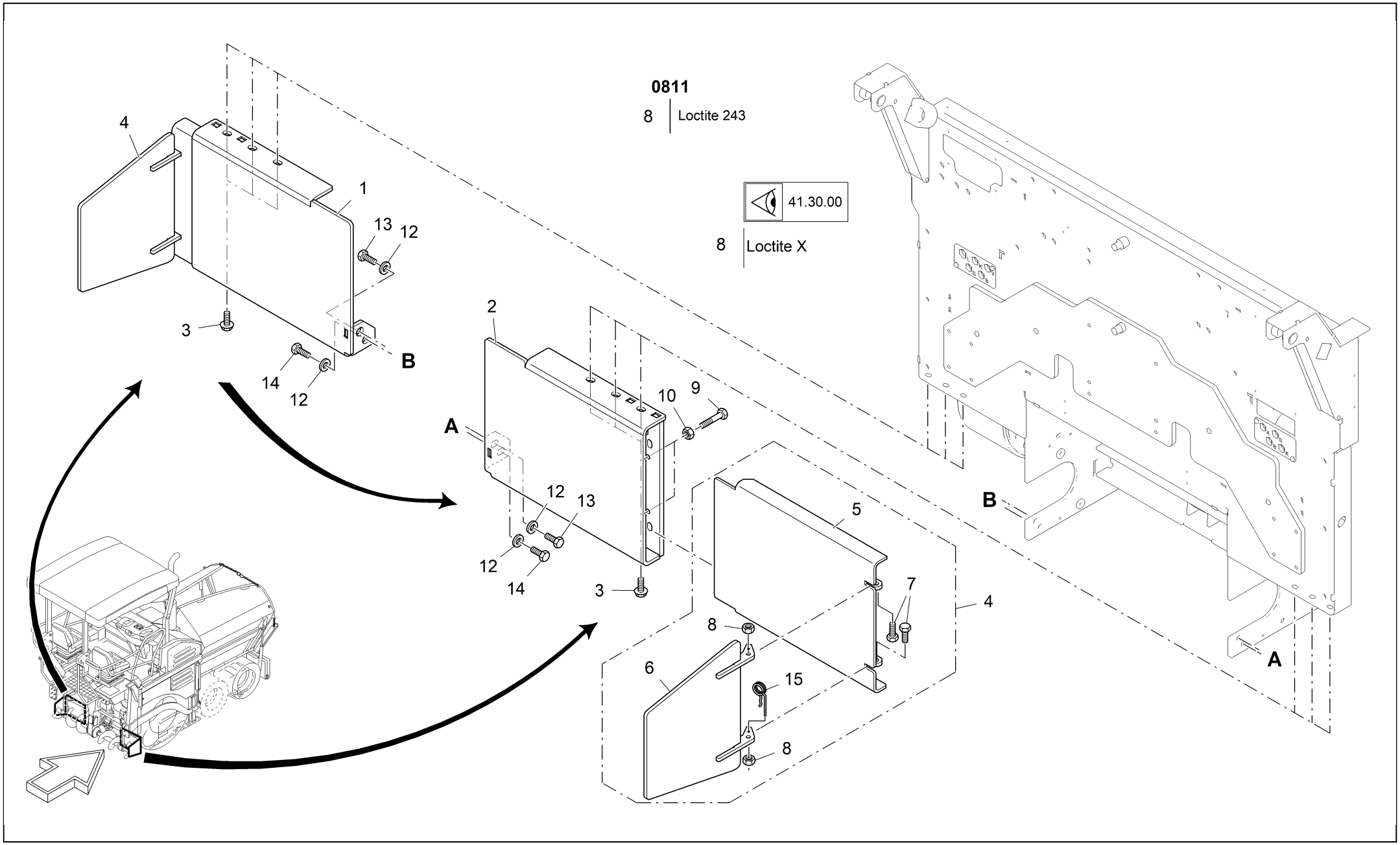
0811
8 Loctite 243
41.30.00
8 Loctite X
1
2
3
4
5
6
7
8
9
10
12
13
14
15
A
B

Item	*Part no.*	*Designation*	*Quantity*	*Quantity unit*	*Serial number from*	*Serial number to*
1	2116474	LIM. PLATE:AUGER TUNNEL	1	PC	208	9999
2	2116841	LIM. PLATE:AUGER TUNNEL	1	PC	208	9999
3	9612300045	SCREW	6	PC	208	9999
4	2051952	LIM. PLATE:AUGER TUNNEL,TURN.	2	PC	208	9999
5	2049742	LIM. PLATE:AUGER TUNNEL	2	PC	208	9999
6	2029743	LIM. PLATE:AUGER TUNNEL	2	PC	208	9999
7	9510310933	SCREW	4	PC	208	9999
8	9500100980	NUT	4	PC	208	9999
9	9512380933	SCREW	4	PC	208	9999
10	9500120934	NUT	4	PC	208	9999
12	9501307349	WASHER	4	PC	208	9999
13	9512300933	SCREW	2	PC	208	9999
14	9512330933	SCREW	2	PC	208	9999
15	9524111024	SPRING PIN	2	PC	208	9999